maxon

EPOS4 Module 50/15
EPOS4 Compact 50/15

Hardware Reference

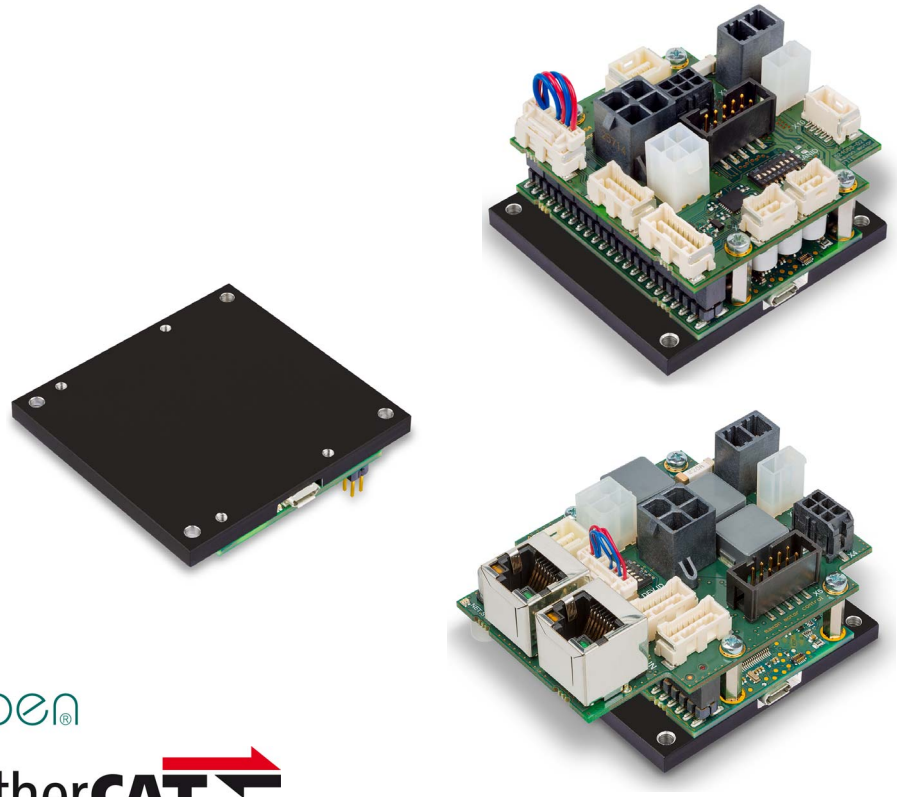

CANopen

EtherCAT

epos.maxongroup.com

EPOS4 Module/Compact 50/15 Positioning Controller | P/Ns 504383 / 520886 / 605299
Hardware Reference
CCMC | Edition 2021-10 | DocID rel10268

TABLE OF CONTENTS

1 ABOUT 5

1.1 About this Document . . . 5
1.2 About the Devices . . . 8
1.3 About the Safety Precautions . . . 10

2 SPECIFICATIONS 11

2.1 Technical Data . . . 11
2.2 Thermal Data . . . 14
2.3 Limitations . . . 16
2.4 Dimensional Drawings . . . 17
2.5 Standards . . . 20

3 SETUP 21

3.1 Generally applicable Rules . . . 21
3.2 Pin Assignment for Module Version . . . 22
3.3 Pin Assignment for Connector Boards & Compact Versions . . . 25
3.3.1 EPOS4 CB Power CAN (520884) / EPOS4 Compact 50/15 CAN (520886) . . . 25
3.3.2 EPOS4 CB Power EtherCAT (604594) / EPOS4 Compact 50/15 EtherCAT (605299) . . . 25
3.3.3 Cabling . . . 26
3.3.4 Tools . . . 27
3.3.5 Connections . . . 28
3.3.5.1 Power Supply (X1) . . . 29
3.3.5.2 Logic Supply (X2) . . . 30
3.3.5.3 Motor (X3a) (X3b) . . . 31
3.3.5.4 Hall Sensor (X4) . . . 33
3.3.5.5 Encoder (X5) . . . 34
3.3.5.6 Sensor (X6) . . . 35

READ THIS FIRST

***These instructions are intended for qualified technical personnel. Prior commencing with any activities**…*

- *you must carefully read and understand this manual and*
- *you must follow the instructions given therein.*

***EPOS4 Module 50/15 and EPOS4 Compact 50/15** positioning controllers are considered as partly completed machinery according to EU Directive 2006/42/EC, Article 2, Clause (g) and **are intended to be incorporated into or assembled with other machinery or other partly completed machinery or equipment**.*
***Therefore, you must not put the device into service**,…*

- *unless you have made completely sure that the other machinery fully complies with the EU directive's requirements!*
- *unless the other machinery fulfills all relevant health and safety aspects!*
- *unless all respective interfaces have been established and fulfill the herein stated requirements!*

3.3.5.7 Digital I/O (X7) . . . 36
3.3.5.8 Analog I/O (X8) . . . 37
3.3.5.9 STO (X9) . . . 38
3.3.5.10 RS232 (X10) . . . 39
3.3.5.11 CAN 1 (X11) & CAN 2 (X12) . . . 40
3.3.5.12 EtherCAT IN (X14) & EtherCAT OUT (X15) . . . 41
3.3.6 DIP Switch Configuration (SW1) . . . 43
3.3.6.1 CAN ID (Node-ID) / DEV ID . . . 43
3.3.6.2 CAN automatic Bit Rate Detection (Compact CAN) . . . 44
3.3.6.3 CAN Bus Termination (Compact CAN) . . . 45
3.3.6.4 Digital Input Level . . . 45
3.3.7 Spare Parts . . . 45
3.4 Connection Specifications . . . 46
3.4.1 Power Supply . . . 46
3.4.2 Logic Supply . . . 47
3.4.3 Motor . . . 48
3.4.4 Hall Sensor . . . 49
3.4.5 Encoder . . . 50
3.4.6 Sensor . . . 53
3.4.6.1 Incremental Encoder . . . 53
3.4.6.2 SSI Absolute Encoder . . . 59
3.4.6.3 High-speed Digital I/Os . . . 61
3.4.7 Digital I/Os . . . 64
3.4.7.1 Module . . . 64
3.4.7.2 Compact . . . 65
3.4.8 Safe Torque Off I/Os . . . 68
3.4.9 Analog I/Os . . . 70
3.4.10 Serial Communication Interface (SCI) / RS232 . . . 72
3.4.10.1 Module . . . 72
3.4.10.2 Compact CAN . . . 73
3.4.11 CAN Interface / ID Setting . . . 74
3.4.11.1 Connection . . . 74
3.4.11.2 Configuration . . . 75
3.4.12 Serial Peripheral Interface (SPI) . . . 77
3.4.13 USB (X13) . . . 78
3.5 Status Indicators . . . 79

4 MOTHERBOARD DESIGN GUIDE 83

4.1 Requirements for Components of Third-party Suppliers 84

4.1.1 Socket Headers 84

4.1.2 Supply Voltage 84

4.1.3 Logic Supply Voltage 85

4.1.4 Motor Cables and Motor Chokes 86

4.1.5 RS232 Transceiver 87

4.1.6 Recommended Components and Manufacturers 88

4.2 Design Guidelines 90

4.2.1 Ground 90

4.2.2 Layout 90

4.3 THT Footprint 91

5 WIRING 93

5.1 Possible Combinations to connect a Motor 94

5.2 Main Wiring Diagrams 96

5.3 Excerpts 98

LIST OF FIGURES 101

LIST OF TABLES 103

INDEX 107

1 ABOUT

1.1 About this Document

1.1.1 Intended Purpose

Use the document to…
***–stay safe**,*
***–be fast**,*
***–end up with set up and ready-to-go equipment**.*

The purpose of the present document is to familiarize you with the EPOS4 Module 50/15 and EPOS4 Compact 50/15 positioning controllers. It will highlight the tasks for safe and adequate installation and/or commissioning. Follow the described instructions …

- to avoid dangerous situations,
- to keep installation and/or commissioning time at a minimum,
- to increase reliability and service life of the described equipment.

The present document is part of a documentation set and contains performance data and specifications, information on fulfilled standards, details on connections and pin assignment, and wiring examples. The below overview shows the documentation hierarchy and the interrelationship of its individual parts:

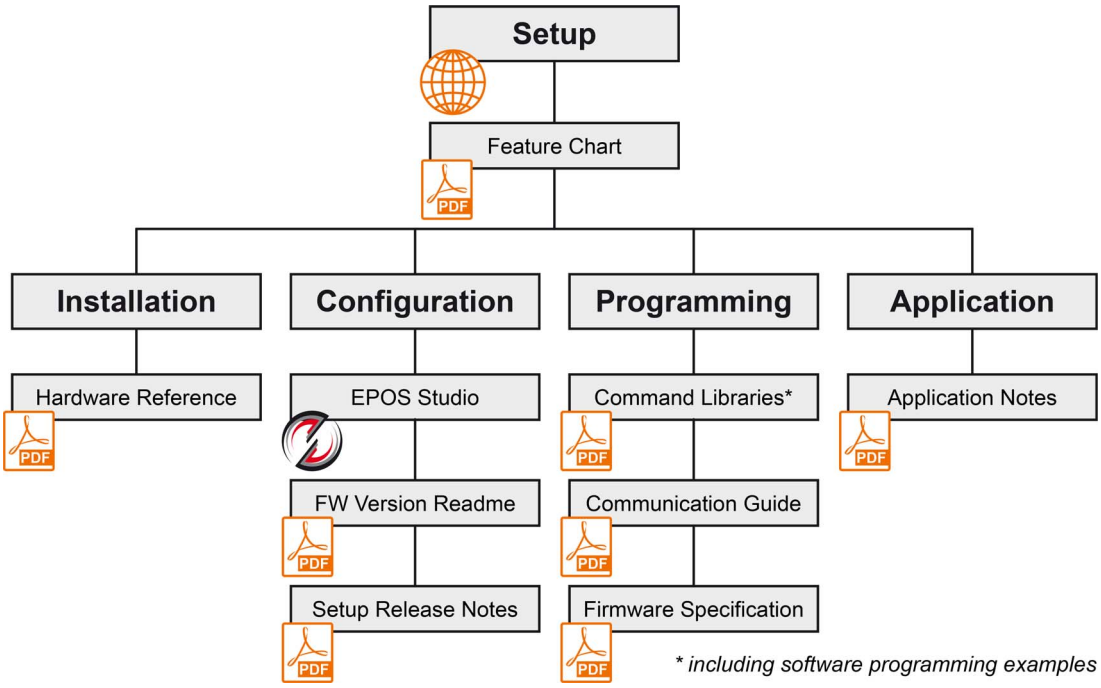

Figure 1-1 Documentation structure

1.1.2 Target Audience

The present document is intended for trained and skilled personnel. It conveys information on how to understand and fulfill the respective work and duties.

1.1.3 How to use

If not stated otherwise, the described details are valid for both the plug-in module and the stand-alone compact version (➔chapter “1.2 About the Devices” on page 1-8).

Throughout the document, the following notations and codes will be used.

Notation	Meaning
(n)	refers to an item (such as part numbers, list items, etc.)
➔	denotes “see”, “see also”, “take note of” or “go to”

Table 1-1 Notation used

1.1.4 Symbols & Signs

In the course of the present document, the following symbols and signs will be used.

Type	Symbol	Meaning	
Safety alert	(typical)	DANGER	Indicates an **imminent hazardous situation**. If not avoided, it **will result in death or serious injury**.
		WARNING	Indicates a **potential hazardous situation**. If not avoided, it **can result in death or serious injury**.
		CAUTION	Indicates a **probable hazardous situation** or calls the attention to unsafe practices. If not avoided, it **may result in injury**.
Prohibited action	(typical)	Indicates a dangerous action. Hence, **you must not**!	
Mandatory action	(typical)	Indicates a mandatory action. Hence, **you must**!	
Information		Requirement / Note / Remark	Indicates an activity you must perform prior continuing, or gives information on a particular item you need to observe.
		Best practice	Indicates an advice or recommendation on the easiest and best way to further proceed.
		Material Damage	Indicates information particular to possible damage of the equipment.

Table 1-2 Symbols and signs

1.1.5 Trademarks and Brand Names

For easier legibility, registered brand names are listed below and will not be further tagged with their respective trademark. It must be understood that the brands (the list below is not necessarily concluding) are protected by copyright and/or other intellectual property rights even if their legal trademarks are omitted in the later course of this document.

Brand Name	Trademark Owner
Adobe® Reader®	© Adobe Systems Incorporated, USA-San Jose, CA
BiSS	© iC-Haus GmbH, DE-Bodenheim
CANopen® CiA®	© CiA CAN in Automation e.V, DE-Nuremberg
CLIK-Mate™ Micro-Fit™ Mini-Fit Jr.™ Mega-Fit®	© Molex, USA-Lisle, IL
EnDat	© DR. JOHANNES HEIDENHAIN GmbH, DE-Traunreut
EtherCAT®	© EtherCAT Technology Group, DE-Nuremberg, licensed by Beckhoff Automation GmbH, DE-Verl
Linux®	© Linus Torvalds (The Linux Foundation, USA-San Francisco CA)
Littelfuse® SMD NANO2®	© Littelfuse Inc., USA-Chicago, IL
Windows®	© Microsoft Corporation, USA-Redmond, WA

Table 1-3 Brand names and trademark owners

1.1.6 Copyright

This document is protected by copyright. Any further use (including reproduction, translation, microfilming, and other means of electronic data processing) without prior written approval is not permitted. The mentioned trademarks belong to their respective owners and are protected under intellectual property rights.
© 2021 maxon. All rights reserved. Subject to change without prior notice.

CCMC | EPOS4 Module/Compact 50/15 Hardware Reference | Edition 2021-10 | DocID rel10268

maxon motor ag
Brünigstrasse 220 +41 41 666 15 00
CH-6072 Sachseln www.maxongroup.com

1.2 About the Devices

Capabilities of the device, included features, and supported motors.

maxon's EPOS4 Module 50/15 and EPOS4 Compact 50/15 are small-sized, full digital, smart positioning control units. Their high power density allow flexible use for brushed DC and brushless EC (BLDC) motors up to approximately 750 Watts with various feedback options, such as Hall sensors, incremental encoders as well as absolute sensors in a multitude of drive applications.

The devices are specially designed to be commanded and controlled as a slave node in a CANopen or EtherCAT network. In addition, the units can be operated via any USB or RS232 communication port of a Windows or Linux workstation (the Module thereby requires an external transceiver). Moreover, the integrated extension interface of the Module allows pooling with optionally available communication interfaces or other additional functionalities.

Latest technology, such as field-oriented control (FOC), acceleration/velocity feed forward, or dual loop, in combination with highest control cycle rates allow sophisticated, ease-of-use motion control.

Thanks to its smart design, the EPOS4 Module 50/15 can either be used in combination with EPOS4 CB Power connector boards as a compact, integrated solution or be incorporated into customer-specific motherboards for single axis or multi axes motion control systems. The controller is available in the following configurations:

- **EPOS4 Module 50/15 (504383)**
  Plug-in module for use with maxon EPOS4 connector boards or customer-specific motherboards
- **EPOS4 CB Power CAN (520884)**
  Connector board for initial commissioning or combination to a compact solution providing all connectors, including CANopen and RS232 interface
- **EPOS4 CB Power EtherCAT (604594)**
  Connector board for initial commissioning or combination to a compact solution providing all connectors, including EtherCAT interface
- **EPOS4 Compact 50/15 CAN (520886)**
  Fully integrated, compact, ready-to-use assembly of plug-in module and CANopen connector board
- **EPOS4 Compact 50/15 EtherCAT (605299)**
  Fully integrated, compact, ready-to-use assembly of plug-in module and EtherCAT connector board

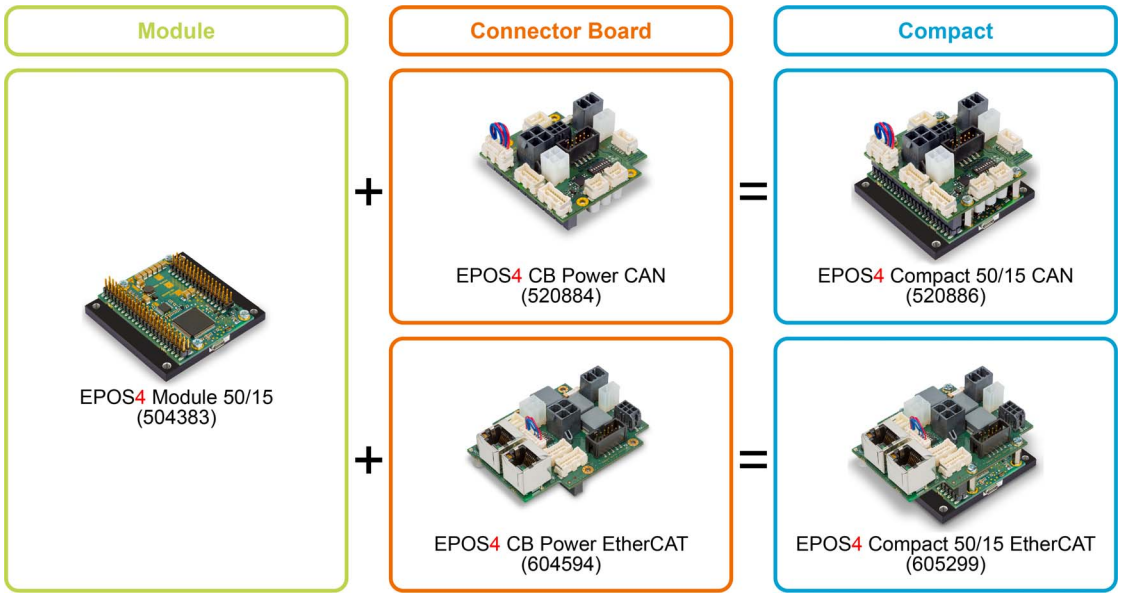

Figure 1-2 Configuration overview

For easier legibility, in the later course of this document naming of components will be as follows:

Short form	Meaning
CB	a connector board (EPOS4 CB Power CAN, EPOS4 CB Power EtherCAT)
Compact	any type of Compact 50/15 version
Compact CAN	EPOS4 Compact 50/15 CAN
Compact EtherCAT	EPOS4 Compact 50/15 EtherCAT
EPOS4	all controller versions (Module and Compact) as well as other EPOS4 positioning controllers as a whole
Module	EPOS4 Module 50/15

Table 1-4 Abbreviations

Find the latest edition of the present document as well as additional documentation and software for EPOS4 positioning controllers also on the Internet: ➔http://epos.maxongroup.com.

In addition, you may wish to browse the EPOS video library. It features video tutorials that provide easy to follow instructions on how to get started with «EPOS Studio» and shows you tips and tricks on how to setup communication interfaces, and so on. Explore on Vimeo: ➔https://vimeo.com/album/4646388

1.3 About the Safety Precautions

Keep in mind: Safety first! Always!

- Make sure that you have read and understood the note “READ THIS FIRST” on page A-2!
- Do not engage with any work unless you possess the stated skills (➔chapter “1.1.2 Target Audience” on page 1-5)!
- Refer to ➔chapter “1.1.4 Symbols & Signs” on page 1-6 to understand the subsequently used indicators!
- You must observe any regulation applicable in the country and/or at the site of implementation with regard to health and safety/accident prevention and/or environmental protection!

DANGER

High voltage and/or electrical shock
Touching live wires causes death or serious injuries!

- *Consider any power cable as connected to live power, unless having proven the opposite!*
- *Make sure that neither end of cable is connected to live power!*
- *Make sure that power source cannot be engaged while work is in process!*
- *Obey lock-out/tag-out procedures!*
- *Make sure to securely lock any power engaging equipment against unintentional engagement and tag it with your name!*

Requirements

- *Make sure that all associated devices and components are installed according to local regulations.*
- *Be aware that, by principle, an electronic apparatus can not be considered fail-safe. Therefore, you must make sure that any machine/apparatus has been fitted with independent monitoring and safety equipment. If the machine/apparatus should break down, if it is operated incorrectly, if the control unit breaks down or if the cables break or get disconnected, etc., the complete drive system must return – and be kept – in a safe operating mode.*
- *Be aware that you are not entitled to perform any repair on components supplied by maxon.*

Electrostatic sensitive device (ESD)

- *Wear working cloth and use equipment in compliance with ESD protective measures.*
- *Handle device with extra care.*

2 SPECIFICATIONS

2.1 Technical Data

EPOS4 Module 50/15 (504383) EPOS4 Compact 50/15 CAN (520886) EPOS4 Compact 50/15 EtherCAT (605299)			
Electrical Rating	Nominal power supply voltage $+V_{CC}$	10…50 VDC	
	Nominal logic supply voltage $+V_C$	Module	10…50 VDC
		Compact	10…50 VDC, optional
	Absolute supply voltage $+V_{min}$ / $+V_{max}$	8 VDC / 56 VDC	
	Output voltage (max.)	0.9 x $+V_{CC}$	
	Output current I_{cont} / I_{max} (<60 s)	15 A / 30 A	
	Pulse Width Modulation frequency	50 kHz	
	Sampling rate PI current controller	25 kHz (40 µs)	
	Sampling rate PI speed controller	2.5 kHz (400 µs)	
	Sampling rate PID positioning controller	2.5 kHz (400 µs)	
	Sampling rate analog input	2.5 kHz (400 µs)	
	Max. efficiency	98% (➔Figure 2-4)	
	Max. speed DC motor	limited by max. permissible speed (motor) and max. output voltage (controller)	
	Max. speed EC motor (block)	100’000 rpm (1 pole pair)	
	Max. speed EC motor (sinusoidal)	50’000 rpm (1 pole pair)	
	Built-in motor choke	Module	—
		Compact	3 x 2.2 µH; 15 A
Inputs & Outputs	Digital Input 1 (general purpose) Digital Input 2 (general purpose) Digital Input 3 (general purpose) Digital Input 4 (general purpose)	Module	+2.1…+36 VDC
		Compact	DIP switch-selectable levels: • Logic: +2.0…+30 VDC • PLC: +9.0…+30 VDC
	Digital Output 1 (general purpose) Digital Output 2 (general purpose)	max. 36 VDC / I_L ≤500 mA (open collector with internal pull-up)	
	STO Input 1 STO Input 2	+4.5…+30 VDC (optically isolated)	
	STO Output	max. 30 VDC / I_L ≤15 mA (optically isolated with self-resetting short-circuit protection)	
	Analog Input 1 Analog Input 2	Resolution 12-bit, −10…+10 V, 10 kHz, differential	

Continued on next page.

EPOS4 Module 50/15 (504383) EPOS4 Compact 50/15 CAN (520886) EPOS4 Compact 50/15 EtherCAT (605299)				
Inputs & Outputs (continued)	Analog Output 1 Analog Output 2	Resolution 12-bit, −4…+4 V, 25 kHz, referenced to GND		
	Digital Hall sensor signals H1, H2, H3	+2.0…+24 VDC (internal pull-up)		
	Digital incremental encoder signals A, A\, B, B\, I, I\	EIA RS422, max. 6.25 MHz		
	Sensor signals (choice between multiple functions) • Digital incremental encoder • Analog incremental encoder SinCos • SSI absolute encoder • High-speed digital input 1…4 • High-speed digital output 1	3-channel, EIA RS422, max. 6.25 MHz 3-channel, resolution 12-bit, ±1.8 V, differential configurable, EIA RS422, 0.4…2 MHz EIA RS422, max. 6.25 MHz EIA RS422, max. 6.25 MHz		
Voltage Outputs	Sensor supply voltage V_{Sensor}	+5 VDC / I_L ≤100 mA		
	Auxiliary output voltage V_{Aux}	+5 VDC / I_L ≤150 mA		
Motor Connections	DC motor	+ Motor, − Motor		
	EC motor		Motor winding 1, Motor winding 2, Motor winding 3	
Interfaces		**Module**	**Compact CAN**	**Compact EtherCAT**
	USB 2.0 / USB 3.0	Full Speed	Full Speed	Full Speed
	RS232	max. 115’200 bit/s; external transceiver necessary	max. 115’200 bit/s	—
	CAN	max. 1 Mbit/s	max. 1 Mbit/s	—
	EtherCAT	Full duplex (100 Mbit/s) as to IEE 802.3 100 Base Tx; optional «EPOS4 EtherCAT Card» required	—	Full duplex (100 Mbit/s) as to IEE 802.3 100 Base Tx
Status Indicators		**Module**	**Compact CAN**	**Compact EtherCAT**
	Device status	Operation (green) Error (red)	Operation (green) Error (red)	Operation (green) Error (red)
	NET status	—	—	RUN state (green) Error (red)
	NET port	—	—	Link activity (green)

Continued on next page.

EPOS4 Module 50/15 (504383) EPOS4 Compact 50/15 CAN (520886) EPOS4 Compact 50/15 EtherCAT (605299)					
			Module	**Compact CAN**	**Compact EtherCAT**
Physical	Weight		approx. 70 g	approx. 126 g	approx. 140g
	Dimensions (L x W x H) [mm]		59.5 x 62.0 x 16.4	59.5 x 65.5 x 35.1	59.5 x 79.5 x 37.8
	Mounting		pluggable female headers 2.54 mm or mounting holes for M3 screws	mounting holes for M3 screws	mounting holes for M3 screws
Environment	Temperature	Operation	−30…+25 °C	−30…+25 °C	−30…+25 °C
		Extended range [a]	+25…+77 °C Derating −0.288 A/°C (➔Figure 2-3) Additional heat sink ➔Table 2-6		
		Storage	−40…+85 °C		
	Altitude [b]	Operation	0…6’000 m MSL		
		Extended range [a]	6’000…10’000 m MSL Derating ➔Figure 2-3		
	Humidity		5…90% (condensation not permitted)		

[a] Operation within the extended range (temperature and altitude) is permitted. However, a respective derating (declination of output current I_{cont}) as to the stated values will apply.

[b] Operating altitude in meters above Mean Sea Level, MSL.

Table 2-5 Technical data

2.2 Thermal Data

2.2.1 Derating of Output Current (Operation without additional Heat Sink)

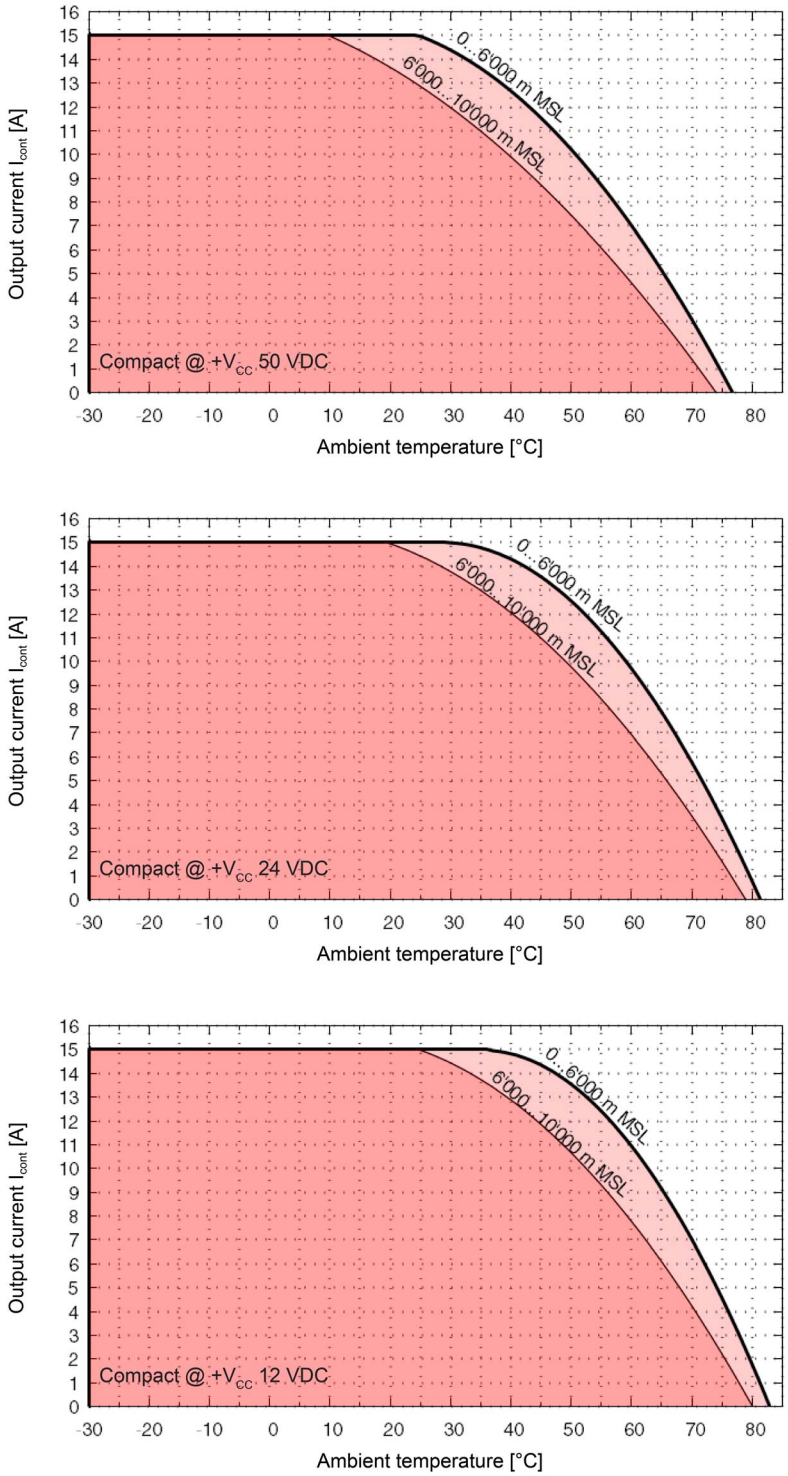

Figure 2-3 Derating of output current (operation without additional heat sink)

2.2.2 Operation with Heat Sink

Thermal resistance of heat sink Rth_{HS-Amb} [K/W]		Ambient temperature T_{Amb}					
		75 °C	65 °C	55 °C	45 °C	35 °C	25 °C
Output current I_{cont}	0…2.5 A	≤5.1	No additional heat sink required				
	2.5…5 A	≤3.9					
	5…7.5 A	≤2.9	≤4.6				
	7.5…10 A	≤2.0	≤3.3	≤4.5			
	10…12.5 A	≤1.3	≤2.3	≤3.2	≤4.1		
	12.5…15 A	≤0.9	≤1.6	≤2.4	≤3.1	≤3.8	

Table 2-6 Thermal resistance of additional heat sink [K/W]

Recommended manufacturer	Type	Dimensions [mm]	Thermal resistance Rth_{HS-Amb} [K/W]
Fischer http://www.fischerelektronik.de/en/	SK 100	59.5 x 66 x 40 75 x 66 x 40	2.4 2.0
	SK 111	62 x 58 x 40 75 x 58 x 40	2.2 2.0
	SK 485	59.5 x 61 x 8.9 75 x 61 x 8.9	4.5 4.0
	ICK PGA 25x25	62.5 x 62.5 x 20	3 @ 1 m/s airflow
Thermo Electric Devices http://www.rs-components.com/	TDEX6015/TH	60 x 60 x 16	2
	TDEX6015/TH12G, with mounted fan	60 x 60 x 47	0.5

Table 2-7 Heat sink – Recommended components

2.2.3 Power Dissipation and Efficiency

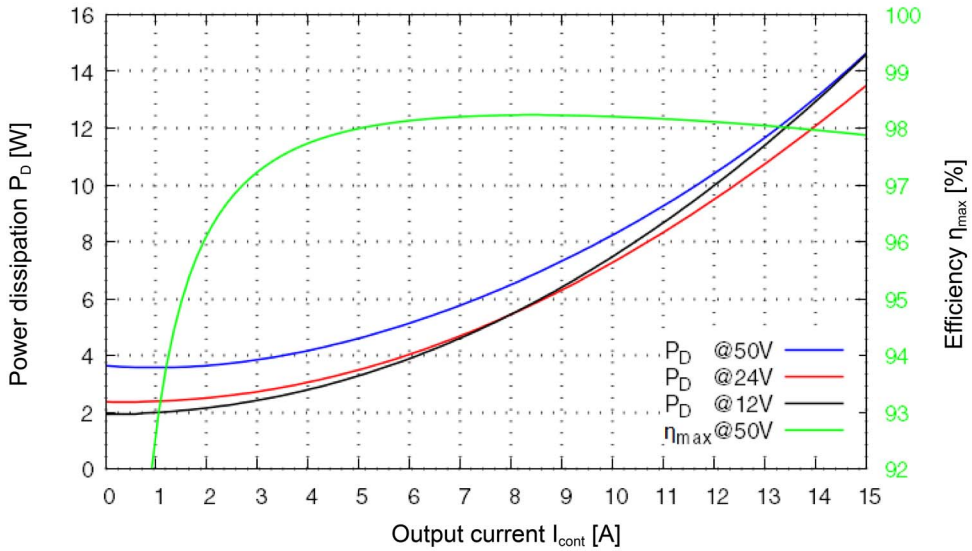

Figure 2-4 Power dissipation and efficiency – EPOS4 Module/Compact 50/15 CAN

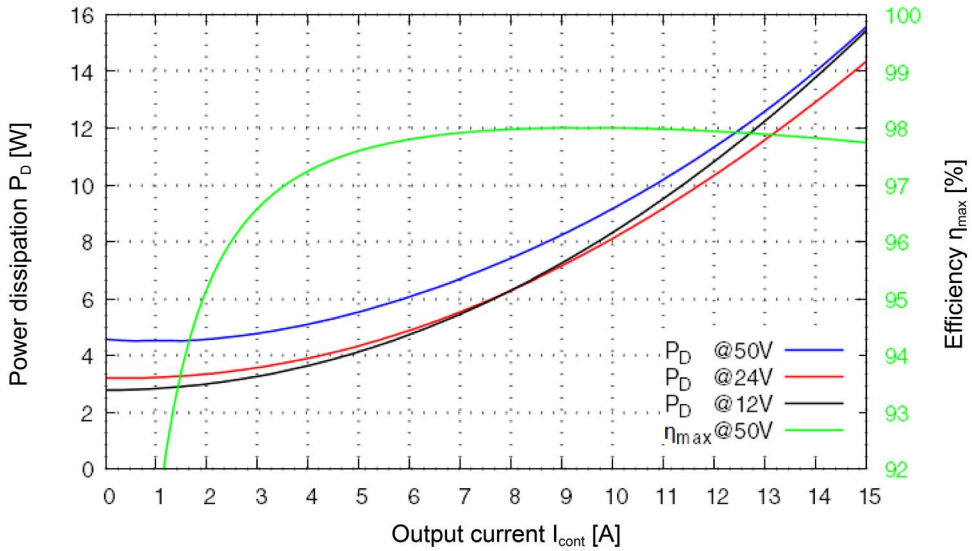

Figure 2-5 Power dissipation and efficiency – EPOS4 Module/Compact 50/15 EtherCAT

2.3 Limitations

Protection functionality	Switch-off threshold	Recovery threshold
Undervoltage	8.0 V	8.5 V
Overvoltage	58 V	56 V
Overcurrent	40 A	—
Thermal overload	95 °C	90 °C

Table 2-8 Limitations

2.4 Dimensional Drawings

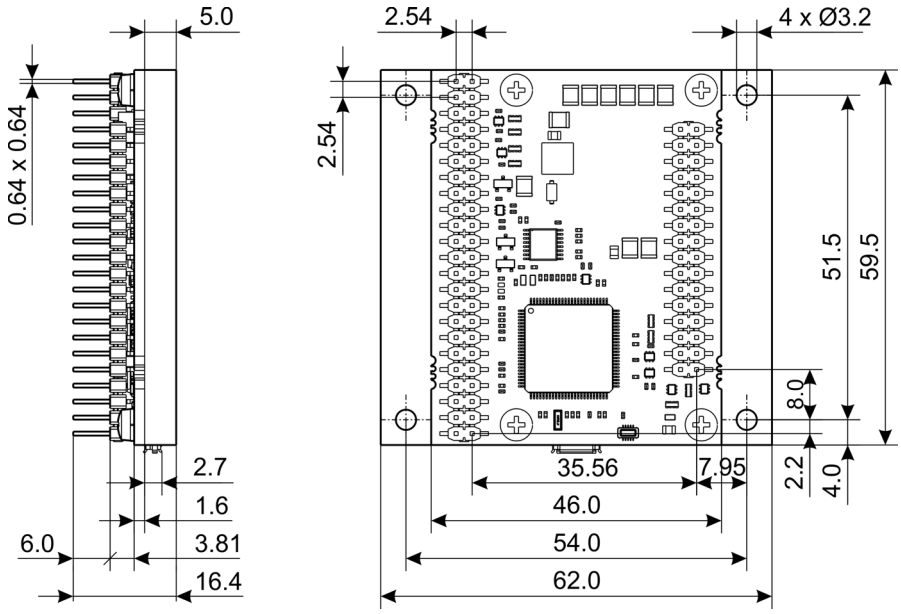

Figure 2-6 EPOS4 Module 50/15 – Dimensional drawing [mm]

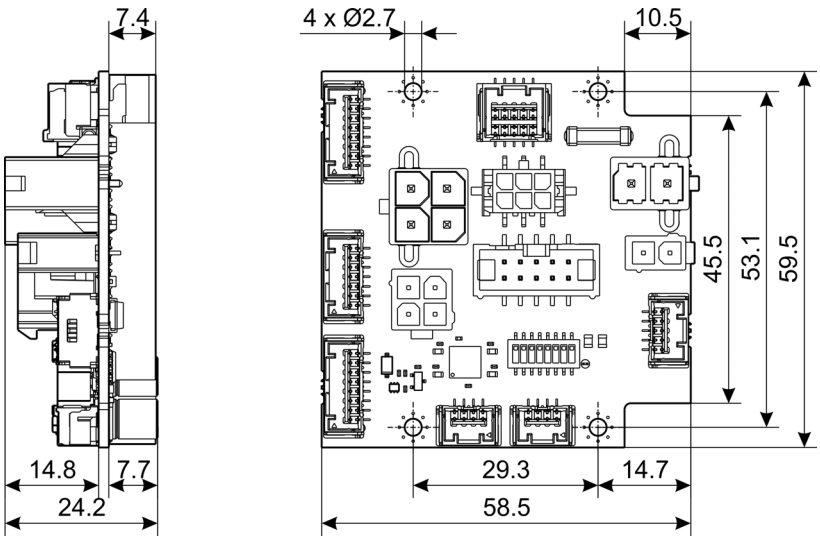

Figure 2-7 EPOS4 CB Power CAN – Dimensional drawing [mm]

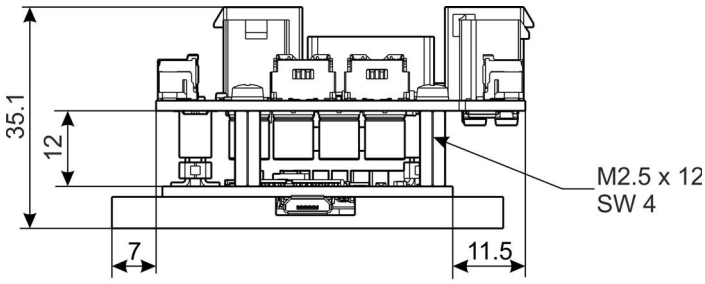

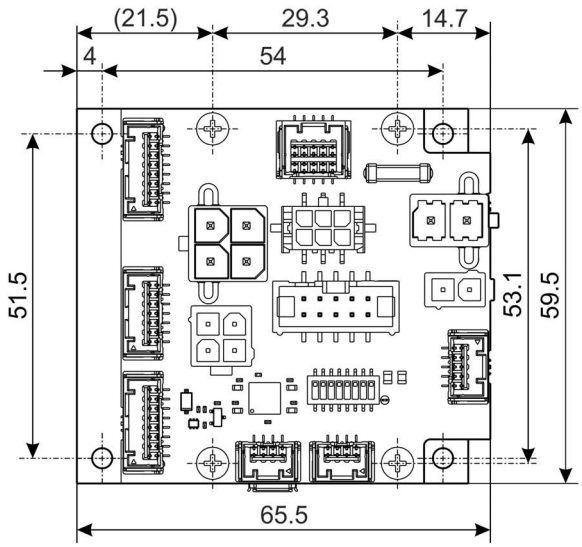

Figure 2-8 EPOS4 Compact 50/15 CAN – Dimensional drawing [mm]

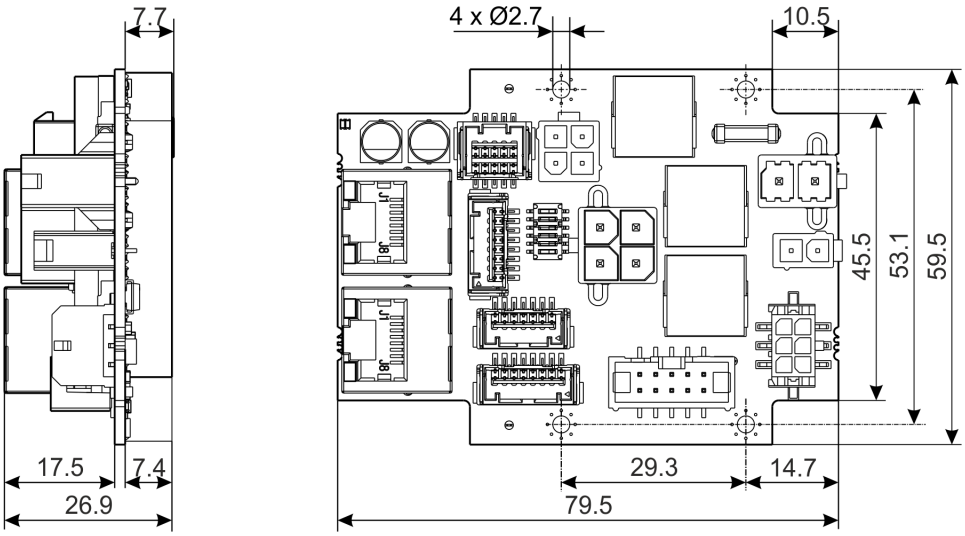

Figure 2-9 EPOS4 CB Power EtherCAT – Dimensional drawing [mm]

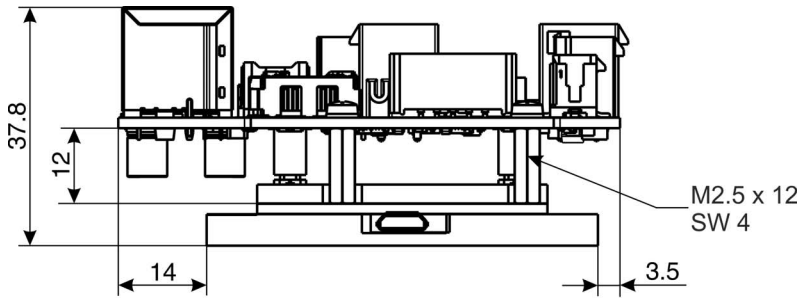

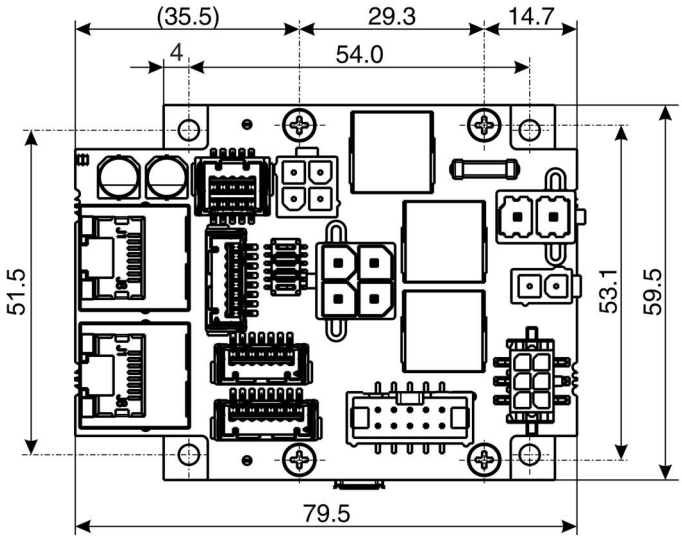

Figure 2-10 EPOS4 Compact 50/15 EtherCAT – Dimensional drawing [mm]

2.5 Standards

The described device has been successfully tested for compliance with the below listed standards. In practical terms, only the complete system (the fully operational equipment comprising all individual components, such as motor, servo controller, power supply unit, EMC filter, cabling etc.) can undergo an EMC test to ensure interference-free operation.

Important Notice
The device's compliance with the mentioned standards does not imply its compliance within the final, ready to operate setup. In order to achieve compliance of your operational system, you must perform EMC testing of the involved equipment as a whole.

Electromagnetic Compatibility		
Generic	IEC/EN 61000-6-2	Immunity for industrial environments
	IEC/EN 61000-6-3	Emission standard for residential, commercial and light-industrial environments
Applied	IEC/EN 55022 (CISPR22)	Radio disturbance characteristics / radio interference
	IEC/EN 61000-4-3	Radiated, radio-frequency, electromagnetic field immunity test >10 V/m
	IEC/EN 61000-4-4	Electrical fast transient/burst immunity test ±2 kV
	IEC/EN 61000-4-6	Immunity to conducted disturbances, induced by radio-frequency fields 10 Vrms

Others		
Environment	IEC/EN 60068-2-6	Environmental testing – Test Fc: Vibration (sinusoidal, 10…500 Hz, 20 m/s²)
	MIL-STD-810F	Random transport (10…500 Hz up to 2.53 g_{rms})
Safety	UL File Number	Unassembled printed circuit board • Module: E76251; E133472; E207844; E337862 • Compact CAN: E76251; E116354; E133472; E207844; E337862 • Compact EtherCAT: E76251; E133472; E207844; E337862
Reliability	MIL-HDBK-217F	Reliability prediction of electronic equipment Environment: Ground, benign (GB) Ambient temperature: 298 K (25 °C) Component stress: In accordance with circuit diagram and nominal power Mean Time Between Failures (MTBF) • Module: 240'400 hours (with heat sink <3.1 K/W) • Compact CAN: 199'049 hours (with heat sink <3.1 K/W) • Compact EtherCAT: 179'777 hours (with heat sink <3.1 K/W)

Table 2-9 Standards

3 SETUP

IMPORTANT NOTICE: PREREQUISITES FOR PERMISSION TO COMMENCE INSTALLATION

EPOS4 Module 50/15 and EPOS4 Compact 50/15 positioning controllers are considered as partly completed machinery according to EU Directive 2006/42/EC, Article 2, Clause (g) and **are intended to be incorporated into or assembled with other machinery or other partly completed machinery or equipment**.

WARNING

Risk of injury
Operating the device without the full compliance of the surrounding system with the EU Directive 2006/42/EC may cause serious injuries!

- *Do not operate the device, unless you have made completely sure that the other machinery fully complies with the EU directive's requirements!*
- *Do not operate the device, unless the other machinery fulfills all relevant health and safety aspects!*
- *Do not operate the device, unless all respective interfaces have been established and fulfill the requirements stated in this document!*

3.1 Generally applicable Rules

Maximal permitted supply voltage

- *Make sure that supply power is between 10…50 VDC.*
- *Supply voltages above 56 VDC, or wrong polarity will destroy the unit.*
- *Note that the necessary output current is depending on the load torque. Yet, the output current limits are as follows:*
  – continuous max. 15 A
  – short-time (acceleration) max. 30 A

Hot plugging the USB interface may cause hardware damage

If the USB interface is being hot-plugged (connecting while the power supply is on), the possibly high potential differences of the two power supplies of controller and PC/Notebook can lead to damaged hardware.

- *Avoid potential differences between the power supply of controller and PC/Notebook or, if possible, balance them.*
- *Insert the USB connector first, then switch on the power supply of the controller.*

3.2 Pin Assignment for Module Version

For in-depth details on connections ➔chapter “3.4 Connection Specifications” on page 3-46.

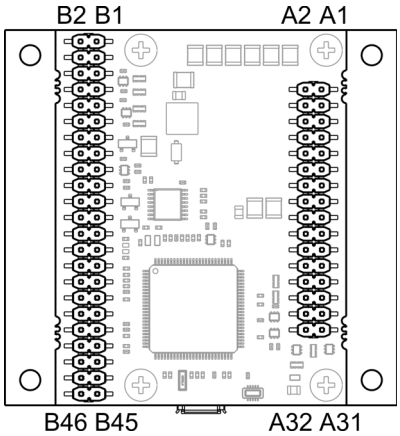

Figure 3-11 Pin assignment

Pin	Signal	Description
A1…A4**	Motor (+M)	DC motor: Motor +
	Motor winding 1	EC motor: Winding 1
A5…A8**	Motor (−M)	DC motor: Motor −
	Motor winding 2	EC motor: Winding 2
A9…A12**	Motor winding 3	EC motor: Winding 3
A13…A16**	$+V_{CC}$	Power supply voltage (+10…+50 VDC)
A17	$+V_C$	Logic supply voltage (+10…+50 VDC)
A18…A22**	GND	Ground
A23	Hall sensor 1	Hall sensor 1 input
A24	Hall sensor 2	Hall sensor 2 input
A25	Hall sensor 3	Hall sensor 3 input
A26	V_{Sensor}	Sensor supply voltage (+5 VDC; I_L ≤100 mA)
A27	Channel A	Digital incremental encoder channel A
A28	Channel A\	Digital incremental encoder channel A complement
A29	Channel B	Digital incremental encoder channel B
A30	Channel B\	Digital incremental encoder channel B complement
A31	Channel I	Digital incremental encoder channel I
A32	Channel I\	Digital incremental encoder channel I complement
** Connect all pins in respect to the individual pin current rating.		

Table 3-10 Pin assignment A1…A32 (X1…X5)

Pin	Signal	Description
B1	DigIN1	Digital input 1
B2	DigIN2	Digital input 2
B3	DigIN3	Digital input 3
B4	DigIN4	Digital input 4
B5	DigOUT1	Digital output 1
B6	DigOUT2	Digital output 2
B7	Channel A	Digital/analog incremental encoder channel A
	HsDigIN1	High-speed digital input 1
B8	Channel A\	Digital/analog incremental encoder channel A complement
	HsDigIN1\	High-speed digital input 1 complement
B9	Channel B	Digital/analog incremental encoder channel B
	HsDigIN2	High-speed digital input 2
B10	Channel B\	Digital/analog incremental encoder channel B complement
	HsDigIN2\	High-speed digital input 2 complement
B11	Channel I	Digital/analog incremental encoder channel I
	HsDigIN3	High-speed digital input 3
	Clock	Clock (SSI)
	HsDigOUT1	High-speed digital output 1
B12	Channel I\	Digital/analog incremental encoder channel I complement
	HsDigIN3\	High-speed digital input 3 complement
	Clock\	Clock (SSI) complement
	HsDigOUT1\	High-speed digital output 1 complement
B13	Data	Data (SSI)
	HsDigIN4	High-speed digital input 4
B14	Data\	Data (SSI) complement
	HsDigIN4\	High-speed digital input 4 complement
B15	V_{Aux}	Auxiliary output voltage (+5 VDC; I_L ≤150 mA)
B16	GND	Ground
B17	STO-IN1+	Safe Torque Off input 1, positive signal
B18	STO-IN1−	Safe Torque Off input 1, negative signal
B19	STO-IN2+	Safe Torque Off input 2, positive signal
B20	STO-IN2−	Safe Torque Off input 2, negative signal
B21	STO-OUT+	Safe Torque Off output, positive signal
B22	STO-OUT−	Safe Torque Off output, negative signal
B23	AnIN1+	Analog input 1, positive signal
B24	AnIN1−	Analog input 1, negative signal
B25	AnIN2+	Analog input 2, positive signal
B26	AnIN2−	Analog input 2, negative signal
B27	AnOUT1	Analog output 1
B28	AnOUT2	Analog output 2
B29	ID 1	CAN ID / DEV ID 1 (valence = 1)
B30	ID 2	CAN ID / DEV ID 2 (valence = 2)

Continued on next page.

Pin	Signal	Description
B31	ID 3	CAN ID / DEV ID 3 (valence = 4)
B32	ID 4	CAN ID / DEV ID 4 (valence = 8)
B33	ID 5	CAN ID / DEV ID 5 (valence = 16)
B34	Auto bit rate	Automatic bit rate detection of CAN bus
B35	CAN high	CAN high bus line
B36	CAN low	CAN low bus line
B37…B38	GND	Ground
B39 [c]	DSP_RxD	Serial communication interface receive (UART)
B40	DSP_TxD	Serial communication interface transmit (UART)
B41 [d]	SPI_CLK	Serial Peripheral Interface clock
B42 [d]	SPI_IRQ	Serial Peripheral Interface interrupt request
B43 [d]	SPI_SOMI	Serial Peripheral Interface Slave output, Master input
B44 [d]	SPI_SIMO	Serial Peripheral Interface Slave input, Master output
B45 [d]	SPI_CS2	Serial Peripheral Interface chip select 2
B46 [d]	SPI_CS1	Serial Peripheral Interface chip select 1
[c] connect to sensor supply voltage V_{Sensor} (A26) when RS232 is not in use [d] only used for maxon extension modules		

Table 3-11 Pin assignment B1…B46 (X6…X12)

3.3 Pin Assignment for Connector Boards & Compact Versions

As an alternative to developing an own motherboard, ready-made connector boards are available to combine the Module to Compact versions. They comprise all required connections.
For in-depth details on connections ➔chapter “3.4 Connection Specifications” on page 3-46.

3.3.1 EPOS4 CB Power CAN (520884) / EPOS4 Compact 50/15 CAN (520886)

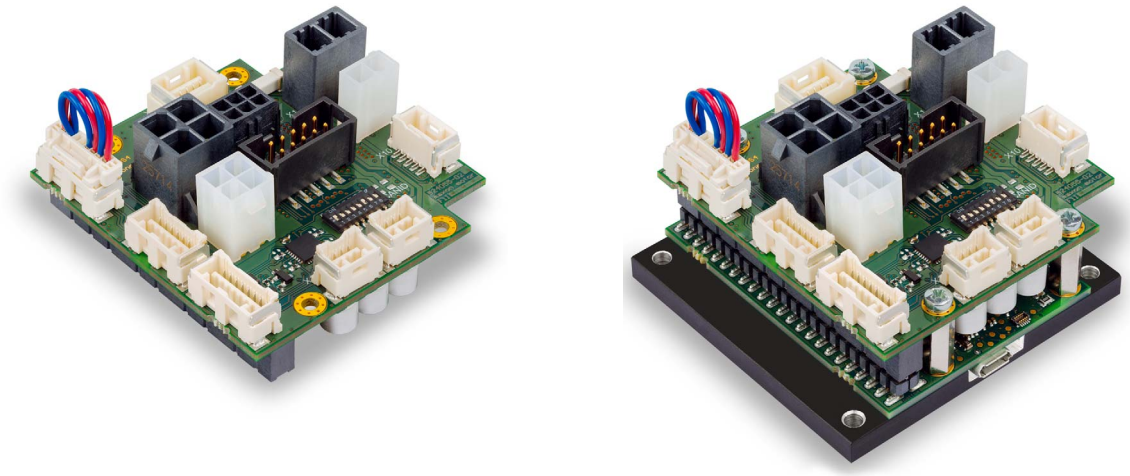

Figure 3-12 EPOS4 CB Power CAN (left) / EPOS4 Compact 50/15 CAN (right)

3.3.2 EPOS4 CB Power EtherCAT (604594) / EPOS4 Compact 50/15 EtherCAT (605299)

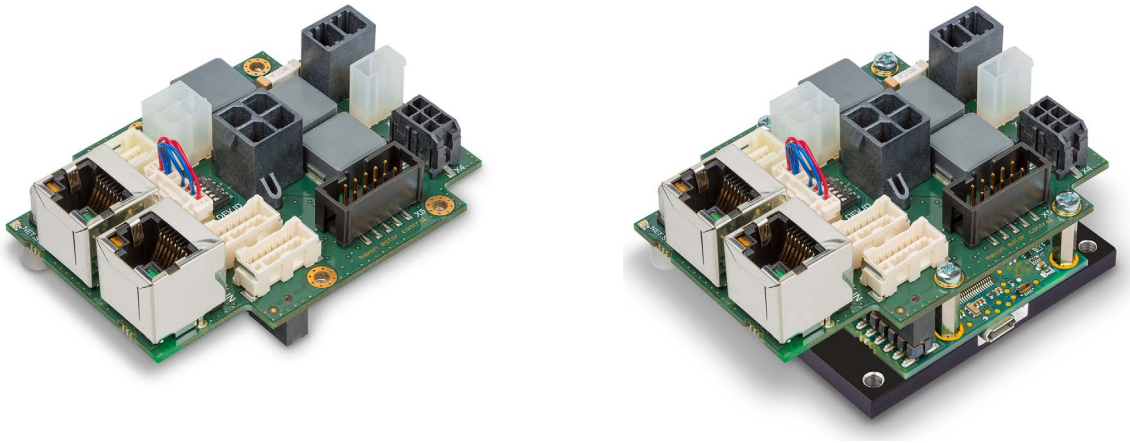

Figure 3-13 EPOS4 CB Power EtherCAT (left) / EPOS4 Compact 50/15 EtherCAT (right)

3.3.3 Cabling

PLUG&PLAY

Take advantage of maxon's prefab cable assemblies. They come as ready-to-use parts and will help to reduce commissioning time to a minimum.

a) Check the following table and find the part number of the cable assembly that matches the setup you will be using.

b) Follow the cross-reference to get the cable's pin assignment.

Connector		Prefab Cable Assembly		
Compact CAN	**Compact EtherCAT**	**Designation**	**Part Number**	**➔Page**
X1		Power Cable High Current **Mandatory for supply of power stage!**	520850	3-29
X2		Power Cable **Optional for separate logic supply!**	275829	3-30
X3a		Motor Cable	275851	3-32
X3b		Motor Cable High Current	520851	3-32
X4		Hall Sensor Cable	275878	3-33
X5		Encoder Cable	275934	3-34
X6		Sensor Cable 5x2core	520852	3-36
X7		Signal Cable 8core	520853	3-36
X8		Signal Cable 7core	520854	3-37
X9		Signal Cable 8core	520853	3-36
X10	—	RS232-COM Cable	520856	3-39
X11	—	CAN-COM Cable CAN-CAN Cable	520857 520858	3-40 3-40
X12	—	CAN-COM Cable CAN-CAN Cable	520857 520858	3-40 3-40
X13		USB Type A - micro B Cable (located at the Module)	403968	3-78
—	X14	Ethernet Cable	422827	3-42
—	X15	Ethernet Cable	422827	3-42

Table 3-12 Prefab maxon cables

MAKE&BAKE YOUR OWN

If you decide not to employ maxon's prefab cable assemblies, you might wish to use the prepackaged kit that contains all connectors required to make up your own cabling.

EPOS4 Connector Set (520859)		
Connector	**Specification**	**Quantity**
Connectors		
X1	Molex Mega-Fit, 2 poles (171692-0102)	1
X2	Molex Mini-Fit Jr., 2 poles (39-01-2020)	2
X3a	Molex Mini-Fit Jr., 4 poles (39-01-2040)	1
X3b	Molex Mega-Fit, 4 poles (171692-0104)	1
X4	Molex Micro-Fit 3.0, 6 poles (430-25-0600)	1
X6	Molex CLIK-Mate, dual row, 10 poles (503149-1000)	1
X7 / X9	Molex CLIK-Mate, single row, 8 poles (502578-0800)	2
X8	Molex CLIK-Mate, single row, 7 poles (502578-0700)	1
X10	Molex CLIK-Mate, single row, 5 poles (502578-0500)	1
X11 / X12	Molex CLIK-Mate, single row, 4 poles (502578-0400)	2
Crimp Terminals		
X1 / X3b	Molex Mega-Fit, female crimp terminal (172063-0311)	7
X2 / X3a	Molex Mini-Fit Jr. female crimp terminal (45750-1111)	9
X4	Molex Micro-Fit 3.0 female crimp terminal (43030-0010)	7
X6…X12	Molex CLIK-Mate crimp terminal (502579-0100)	44
Accessories		
X5	3M Retainer Clip with strain relief, height 13.5 mm (3505-8110)	1

Table 3-13 EPOS4 Connector Set – Content

3.3.4 Tools

Tool	Manufacturer	Part Number
Hand crimper for CLIK-Mate crimp terminals	Molex	63819-4600
Hand crimper for Micro-Fit 3.0 crimp terminals	Molex	63819-0000
Hand crimper for Mega-Fit crimp terminals	Molex	63825-7100
Hand crimper for Mini-Fit crimp terminals	Molex	63819-0900

Table 3-14 Recommended tools

3.3.5 Connections

The USB interface (X13) is located at the Module.

EPOS4 CB Power CAN

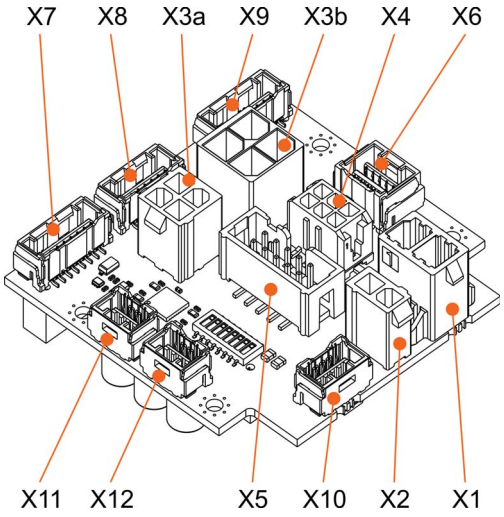

EPOS4 CB Power EtherCAT

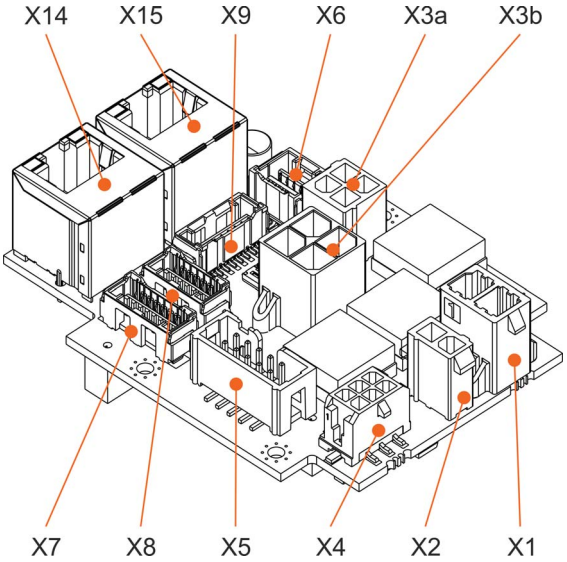

X1	**Power Supply ➔page 3-29**
X2	**Logic Supply ➔page 3-30**
X3a	**Motor ➔page 3-31**
X3b	**Motor ➔page 3-31**
X4	**Hall Sensor ➔page 3-33**
X5	**Encoder ➔page 3-34**
X6	**Sensor ➔page 3-35**
X7	**Digital I/O ➔page 3-36**
X8	**Analog I/O ➔page 3-37**
X9	**STO ➔page 3-38**
X10	**RS232 ➔page 3-39**
X11	**CAN 1 ➔page 3-40**
X12	**CAN 2 ➔page 3-40**
X14	**EtherCAT IN ➔page 3-41**
X15	**EtherCAT OUT ➔page 3-41**

Figure 3-14 Connector Boards – Connectors

How to read pin assignment tables

- *The first column describes both the pin number of the connector and of the matching prefab maxon cable's Head A.*
- *The second column describes the cable core color of the prefab maxon cable.*
- *The third column describes the pin number of the prefab maxon cable's Head B.*

3.3.5.1 Power Supply (X1)

Use of X1 is mandatory
You must employ X1 to connect the controller to the electrical supply. Use X2 only if you wish to connect an optional, separately wired logic supply.

Best practice
Keep the motor mechanically disconnected during the setup and adjustment phase.

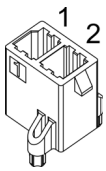

Figure 3-15 Power supply connector X1

X1 Head A Pin	Prefab Cable Color	Head B Pin	Signal	Description
1	black	–	GND	Ground
2	black	+	$+V_{CC}$	Power supply voltage (+10…+50 VDC)

Table 3-15 Power supply connector X1 – Pin assignment

Power Cable High Current (520850)		
A 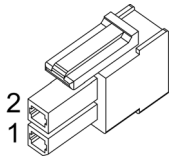 B		
Cross-section	2 x 2.5 mm², grey	
Length	3 m	
Head A	Plug	Molex Mega-Fit, 2 poles (171692-0102)
	Contacts	Molex Mega-Fit, female crimp terminals (172063)
Head B	Wire end sleeves 2.5 mm²	

Table 3-16 Power Cable High Current

3.3.5.2 Logic Supply (X2)

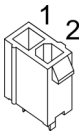

Figure 3-16 Logic supply connector X2

X2 Head A Pin	Prefab Cable Color	Head B Pin	Signal	Description
1	black	–	GND	Ground
2	black	+	$+V_C$	Logic supply voltage (+10…+50 VDC)

Table 3-17 Logic supply connector X2 – Pin assignment

Power Cable (275829)		
A 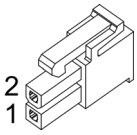 B		
Cross-section	2 x 0.75 mm², grey	
Length	3 m	
Head A	Plug	Molex Mini-Fit Jr., 2 poles (39-01-2020)
	Contacts	Molex Mini-Fit Jr. female crimp terminals (45750)
Head B	Wire end sleeves 0.75 mm²	

Table 3-18 Power Cable

3.3.5.3 Motor (X3a) (X3b)

The controller is set to drive either maxon EC motor (BLDC, brushless DC motor) or maxon DC motor (brushed DC motor) with separated motor/encoder cable.

Maximum permitted current

The connectors are designed for the following output currents:

- *X3a: I_{cont} ≤11 A*
- *X3b: I_{cont} ≤15 A*

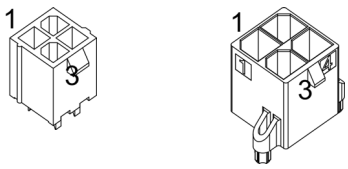

Figure 3-17 Motor connectors X3a (left) and X3b (right)

X3a X3b Head A Pin	Prefab Cable Color	Head B Pin	Signal	Description
1	white		Motor (+M)	DC motor: Motor +
2	brown		Motor (−M)	DC motor: Motor −
3	green		–	not connected
4	black		Motor shield	Cable shield

Table 3-19 Motor connector X3a / X3b – Pin assignment for maxon DC motor

X3a X3b Head A Pin	Prefab Cable Color	Head B Pin	Signal	Description
1	white		Motor winding 1	EC motor: Winding 1
2	brown		Motor winding 2	EC motor: Winding 2
3	green		Motor winding 3	EC motor: Winding 3
4	black		Motor shield	Cable shield

Table 3-20 Motor connector X3a / X3b – Pin assignment for maxon EC motor

Continued on next page.

Motor Cable for X3a (275851)		
A 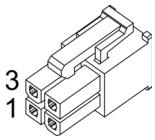 B 3 1		
Cross-section	3 x 0.75 mm², shielded, grey	
Length	3 m	
Head A	Plug	Molex Mini-Fit Jr., 4 poles (39-01-2040)
	Contacts	Molex Mini-Fit Jr. female crimp terminals (45750)
Head B	Wire end sleeves 0.75 mm²	

Table 3-21 Motor Cable

Motor Cable High Current for X3b (520851)		
A 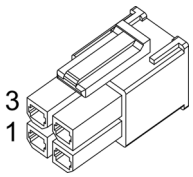 B 3 1		
Cross-section	3 x 2.5 mm², shielded, grey	
Length	3 m	
Head A	Plug	Molex Mega-Fit, 4 poles (171692-0104)
	Contacts	Molex Mega-Fit, female crimp terminals (172063)
Head B	Wire end sleeves 2.5 mm²	

Table 3-22 Motor Cable High Current

3.3.5.4 Hall Sensor (X4)

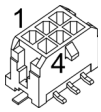

Figure 3-18 Hall sensor connector X4

X4 Head A Pin	Prefab Cable Color	Head B Pin	Signal	Description
1	green		Hall sensor 1	Hall sensor 1 input
2	brown		Hall sensor 2	Hall sensor 2 input
3	white		Hall sensor 3	Hall sensor 3 input
4	yellow		GND	Ground
5	grey		V_{Sensor}	Sensor supply voltage (+5 VDC; I_L ≤100 mA)
6	black		Hall shield	Cable shield

Table 3-23 Hall sensor connector X4 – Pin assignment

Hall Sensor Cable (275878)		
A 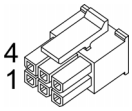 B		
Cross-section	5 x 0.14 mm², shielded, grey	
Length	3 m	
Head A	Plug	Molex Micro-Fit 3.0, 6 poles (430-25-0600)
	Contacts	Molex Micro-Fit 3.0 female crimp terminals (430-30-xxxx)
Head B	Wire end sleeves 0.14 mm²	

Table 3-24 Hall Sensor Cable

3.3.5.5 Encoder (X5)

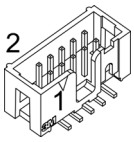

Figure 3-19 Encoder connector X5

X5 Head A Pin	Prefab Cable Color	Head B Pin	Signal	Description
1	brown	1	–	not connected
2	white	2	V_{Sensor}	Sensor supply voltage (+5 VDC; I_L ≤100 mA)
3	red	3	GND	Ground
4	white	4	–	not connected
5	orange	5	Channel A\	Channel A complement
6	white	6	Channel A	Channel A
7	yellow	7	Channel B\	Channel B complement
8	white	8	Channel B	Channel B
9	green	9	Channel I\	Channel I complement
10	white	10	Channel I	Channel I

Table 3-25 Encoder connector X5 – Pin assignment

Accessories		
Suitable strain relief	Retainer	For sockets with strain relief: 1 retainer clip, height 13.5 mm, 3M (3505-8110)
		For sockets without strain relief: 1 retainer clip, height 7.9 mm, 3M (3505-8010)
	Latch	For sockets with strain relief: 2 pieces, 3M (3505-33B)

Table 3-26 Encoder connector X5 – Accessories

Encoder Cable (275934)	
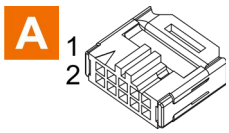 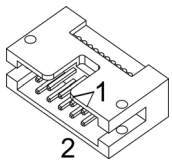	
Cross-section	10 x AWG28, round-jacket, flat cable, pitch 1.27 mm
Length	3 m
Head A	DIN 41651 female, pitch 2.54 mm, 10 poles, with strain relief
Head B	DIN 41651 plug, pitch 2.54 mm, 10 poles, with strain relief

Table 3-27 Encoder Cable

3.3.5.6 Sensor (X6)

Additional sensors, both incremental and serial encoders, can be connected.

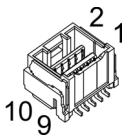

Figure 3-20 Sensor connector X6

X6 Head A Pin	Prefab Cable Color	Head B Pin	Signal	Description
1	white	1	Channel A	Digital/analog incremental encoder channel A
			HsDigIN1	High-speed digital input 1
2	brown	2	Channel A\	Digital/analog incremental encoder channel A complement
			HsDigIN1\	High-speed digital input 1 complement
3	green	3	Channel B	Digital/analog incremental encoder channel B
			HsDigIN2	High-speed digital input 2
4	yellow	4	Channel B\	Digital/analog incremental encoder channel B complement
			HsDigIN2\	High-speed digital input 2 complement
5	grey	5	Channel I	Digital/analog incremental encoder channel I
			HsDigIN3	High-speed digital input 3
			Clock	Clock (SSI)
			HsDigOUT1	High-speed digital output 1
6	pink	6	Channel I\	Digital/analog incremental encoder channel I complement
			HsDigIN3\	High-speed digital input 3 complement
			Clock\	Clock (SSI) complement
			HsDigOUT1\	High-speed digital output 1 complement
7	blue	7	Data	Data (SSI)
			HsDigIN4	High-speed digital input 4
8	red	8	Data\	Data (SSI) complement
			HsDigIN4\	High-speed digital input 4 complement
9	black	9	GND	Ground
10	violet	10	V_{Aux}	Auxiliary output voltage (+5 VDC; I_L ≤150 mA)

Table 3-28 Sensor connector X6 – Pin assignment

Continued on next page.

Sensor Cable 5x2core (520852)		
A 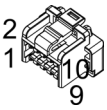 B		
Cross-section	5 x 2 x 0.14 mm², twisted pair, grey	
Length	3 m	
Head A	Plug	Molex CLIK-Mate, dual row, 10 poles (503149-1000)
	Contacts	Molex CLIK-Mate crimp terminals (502579)
Head B	Wire end sleeves 0.14 mm²	

Table 3-29 Sensor Cable 5x2core

3.3.5.7 Digital I/O (X7)

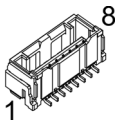

Figure 3-21 Digital I/O connector X7

X7 Head A Pin	Prefab Cable Color	Head B Pin	Signal	Description
1	white	1	DigIN1	Digital input 1
2	brown	2	DigIN2	Digital input 2
3	green	3	DigIN3	Digital input 3
4	yellow	4	DigIN4	Digital input 4
5	grey	5	DigOUT1	Digital output 1
6	pink	6	DigOUT2	Digital output 2
7	blue	7	GND	Ground
8	red	8	V_{Aux}	Auxiliary output voltage (+5 VDC; I_L ≤150 mA)

Table 3-30 Digital I/O connector X7 – Pin assignment

Signal Cable 8core (520853)		
A 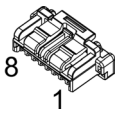 B		
Cross-section	8 x 0.14 mm², grey	
Length	3 m	
Head A	Plug	Molex CLIK-Mate, single row, 8 poles (502578-0800)
	Contacts	Molex CLIK-Mate crimp terminals (502579)
Head B	Wire end sleeves 0.14 mm²	

Table 3-31 Signal Cable 8core

3.3.5.8 Analog I/O (X8)

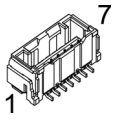

Figure 3-22 Analog I/O connector X8

X8 Head A Pin	Prefab Cable Color	Head B Pin	Signal	Description
1	white	1	AnIN1+	Analog input 1, positive signal
2	brown	2	AnIN1−	Analog input 1, negative signal
3	green	3	AnIN2+	Analog input 2, positive signal
4	yellow	4	AnIN2−	Analog input 2, negative signal
5	grey	5	AnOUT1	Analog output 1
6	pink	6	AnOUT2	Analog output 2
7	blue	7	GND	Ground

Table 3-32 Analog I/O connector X8 – Pin assignment

Signal Cable 7core (520854)		
A 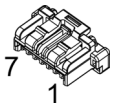 B		
Cross-section	7 x 0.14 mm², grey	
Length	3 m	
Head A	Plug	Molex CLIK-Mate, single row, 7 poles (502578-0700)
	Contacts	Molex CLIK-Mate crimp terminals (502579)
Head B	Wire end sleeves 0.14 mm²	

Table 3-33 Signal Cable 7core

3.3.5.9 STO (X9)

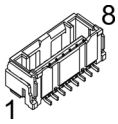

Figure 3-23 STO connector X9

Activation of power stage
*In order to activate the power stage, either **both** STO inputs must be powered or the «STO Idle Connector» (➔Table 3-35; included with every Compact version delivery) must be plugged.*

X9 Head A Pin	Prefab Cable Color	Head B Pin	Signal	Description
1	white	1	STO-IN1+	Safe Torque Off input 1, positive signal
2	brown	2	STO-IN1−	Safe Torque Off input 1, negative signal
3	green	3	STO-IN2+	Safe Torque Off input 2, positive signal
4	yellow	4	STO-IN2−	Safe Torque Off input 2, negative signal
5	grey	5	STO-OUT+	Safe Torque Off output, positive signal
6	pink	6	STO-OUT−	Safe Torque Off output, negative signal
7	blue	7	GND	Ground
8	red	8	V_{STO}	Activation voltage for STO inputs (+5 VDC) ***Note:** Do not use this voltage for any other purpose*

Table 3-34 STO connector X9 – Pin assignment

For the matching prefab cable assembly ➔Table 3-31 on page 3-36.

STO Idle Connector (520860) —included with every Compact version delivery—	
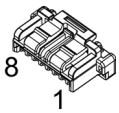	
Plug	Molex CLIK-Mate, single row, 8 poles (502578-0800) with cable bridges

Table 3-35 STO Idle Connector

3.3.5.10 RS232 (X10)

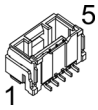

Figure 3-24 RS232 connector X10

X10 Head A Pin	Prefab Cable Color	Head B Pin	Signal	Description
1	white	3	EPOS_RxD	EPOS RS232 receive
2	brown	5	GND	Ground
3	green	2	EPOS_TxD	EPOS RS232 transmit
4	yellow	5	GND	Ground
5	Shield	Housing	Shield	Cable shield

Table 3-36 RS232 connector X10 – Pin assignment

RS232-COM Cable (520856)		
Cross-section	2 x 2 x 0.14 mm², twisted pair, shielded	
Length	3 m	
Head A	Plug	Molex CLIK-Mate, single row, 5 poles (502578-0500)
	Contacts	Molex CLIK-Mate crimp terminals (502579)
Head B	Female D-Sub connector DIN 41652, 9 poles, with mounting screws	

Table 3-37 RS232-COM Cable

3.3.5.11 CAN 1 (X11) & CAN 2 (X12)

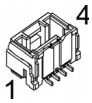

Figure 3-25 CAN 1 connector X11/CAN 2 connector X12

X11/X12 Head A Pin	Prefab Cable Color	520857 Head B Pin	520858 Head B Pin	Signal	Description
1	white	7	1	CAN high	CAN high bus line
2	brown	2	2	CAN low	CAN low bus line
3	green	3	3	GND	Ground
4	Shield	5	4	Shield	Cable shield

Table 3-38 CAN 1 connector X11/CAN 2 connector X12 – Pin assignment

CAN-COM Cable (520857)		
A 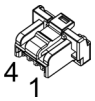 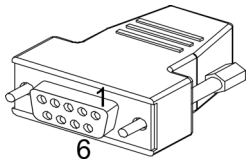 B		
Cross-section	2 x 2 x 0.14 mm², twisted pair, shielded	
Length	3 m	
Head A	Plug	Molex CLIK-Mate, single row, 4 poles (502578-0400)
	Contacts	Molex CLIK-Mate crimp terminals (502579)
Head B	Female D-Sub connector DIN 41652, 9 poles, with mounting screws	

Table 3-39 CAN-COM Cable

CAN-CAN Cable (520858)		
A 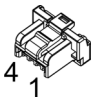 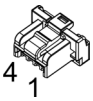 B		
Cross-section	2 x 2 x 0.14 mm², twisted pair, shielded	
Length	3 m	
Head A	Plug	Molex CLIK-Mate, single row, 4 poles (502578-0400)
	Contacts	Molex CLIK-Mate crimp terminals (502579)
Head B	Plug	Molex CLIK-Mate, single row, 4 poles (502578-0400)
	Contacts	Molex CLIK-Mate crimp terminals (502579)

Table 3-40 CAN-CAN Cable

3.3.5.12 EtherCAT IN (X14) & EtherCAT OUT (X15)

Wrong plugging may cause hardware damage
Even though both EtherCAT sockets are prepared for identical external wiring, make sure to always connect them as follows.

- *Use only standard Cat5 cables with RJ45 plug, such as maxon's «Ethernet Cable» (422827).*
- *Use EtherCAT IN (X14) as «Input».*
- *Use EtherCAT OUT (X15) as «Output».*

For detailed information see separate document ➔«EPOS4 Communication Guide».

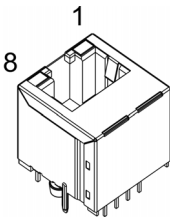

Figure 3-26 EtherCAT IN & EtherCAT OUT connectors X14 & X15

X14 X15 Head A Pin	Prefab Cable Color	Head B Pin	Signal	Description
1	white/ orange	1	TX+	Transmission Data+
2	orange	2	TX−	Transmission Data−
3	white/ green	3	RX+	Receive Data+
4	blue	4	–	not applicable
5	white/ blue	5	–	not applicable
6	green	6	RX−	Receive Data−
7	white/ brown	7	–	not applicable
8	brown	8	–	not applicable

Table 3-41 EtherCAT IN & EtherCAT OUT connectors X14 & X15 – Pin assignment

Continued on next page.

Ethernet Cable (422827)	
Cross-section	Cat. 5e SF/UTP (ISO/IEC 11801), 1:1 patch cable, green
Length	2 m
Head A	RJ45 (8P8CS) EIA/TIA-568B
Head B	RJ45 (8P8CS) EIA/TIA-568B

Table 3-42 Ethernet Cable

3.3.6 DIP Switch Configuration (SW1)

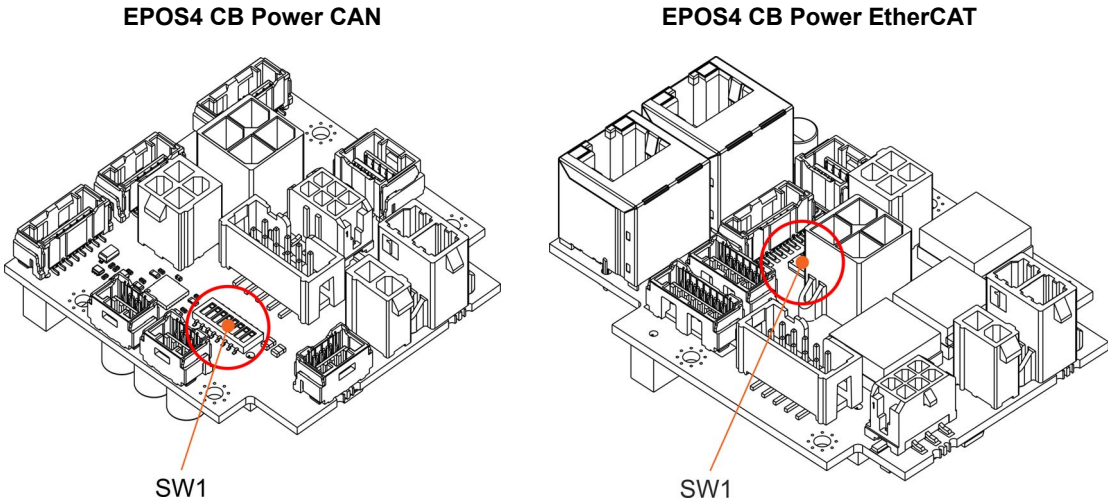

Figure 3-27 DIP switch SW1

3.3.6.1 CAN ID (Node-ID) / DEV ID

Setting the ID by means of DIP switches is currently available for CAN only!

The device's identification (subsequently called "ID") is set by means of DIP switches 1…5. The ID (1…31) may be coded using binary code.

Setting the ID by DIP switch SW1

- *By setting the DIP switch (1…5) address 0 ("OFF"), the ID may be set by software (object 0x2000 «Node-ID», range 1…127).*
- *The ID results in the summed values of DIP switch addresses 1 ("ON").*
- *With EPOS4 CB Power CAN, DIP switches 6…8 do not have any impact on the ID.*
- *With EPOS4 CB Power EtherCAT, DIP switch 6 does not have any impact on the ID.*

Controller		Switch	Binary Code	Valence
Compact CAN	**Compact EtherCAT**			
1 8 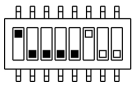 ON OFF (factory setting)	1 6 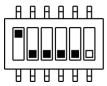 ON OFF (factory setting)	1	2^0	1
		2	2^1	2
		3	2^2	4
		4	2^3	8
		5	2^4	16

Table 3-43 DIP switch SW1 – Binary code values

Continued on next page.

The set ID can be observed by adding the valence of all activated switches. Use the following table as a (non-concluding) guide:

Controller		Switch					ID
Compact CAN	**Compact EtherCAT**	**1**	**2**	**3**	**4**	**5**	
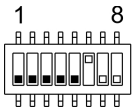	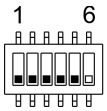	0	0	0	0	0	–
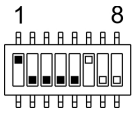	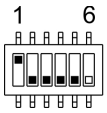	**1**	0	0	0	0	1
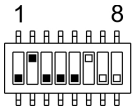	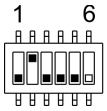	0	**1**	0	0	0	2
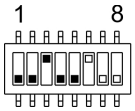	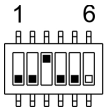	0	0	**1**	0	0	4
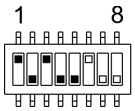	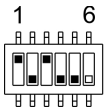	**1**	0	**1**	0	0	5
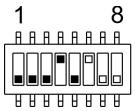	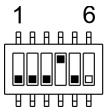	0	0	0	**1**	0	8
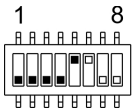	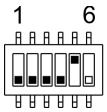	0	0	0	0	**1**	16
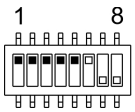	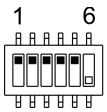	**1**	**1**	**1**	**1**	**1**	31
0 = Switch “OFF” 1 = Switch “ON”							

Table 3-44 DIP switch SW1 – Examples

3.3.6.2 CAN automatic Bit Rate Detection (Compact CAN)

Controller	Switch	OFF	ON
Compact CAN	6	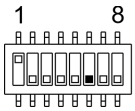 Automatic bit rate detection deactivated	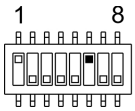 Automatic bit rate detection activated (factory setting)

Table 3-45 DIP switch SW1 – CAN automatic bit rate detection

3.3.6.3 CAN Bus Termination (Compact CAN)

Controller	Switch	OFF	ON
Compact CAN	7	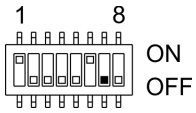 Without bus termination (factory setting)	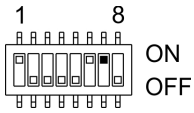 Bus termination with 120 Ω

Table 3-46 DIP switch SW1 – CAN bus termination

3.3.6.4 Digital Input Level

For details ➔chapter “3.4.7 Digital I/Os” on page 3-64.

Controller	Switch	OFF	ON
Compact CAN	8	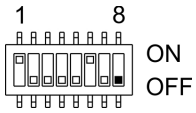 Logic level (factory setting)	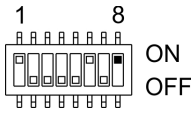 PLC level
Compact EtherCAT	6	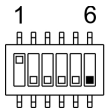 Logic level (factory setting)	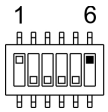 PLC level

Table 3-47 DIP switch SW1 – Digital input level

3.3.7 Spare Parts

Order number	Description
520860	STO Idle Connector X9

Table 3-48 Spare parts list

3.4 Connection Specifications

The actual connection will depend on the overall configuration of your drive system and the type of motor you will be using. Follow the description in given order and choose the wiring diagram (➔as of page 5-93) that best suits the components you are using.

How to read the following data

The following tables feature, where applicable, connection details for both versions the Module and the Compact. Thereby,…

- *the column «Module Header Pin» refers to the Module's header pin number.*
  Example: **A13…A16** *means header A, pins 13 thru 16*
- *the column «Compact/CB Connector Pin» refers to the Compact's or CB's connector pin number.*
  Example: **X1 | 2** *means connector X1, pin 2*

For easier legibility, the subsequently used circuit diagrams refer to the Module. For the corresponding Compact's circuitry take the second column «Connector Pin» into account.

3.4.1 Power Supply

Basically, any power supply may be used provided that it meets the below stated minimum requirements.

Module Header Pin	Compact/CB Connector Pin	Signal	Description
A13…A16**	X1 | 2	$+V_{CC}$	Power supply voltage (+10…+50 VDC)
A18…A22**	X1 | 1	GND	Ground
** Connect all pins in respect to the individual pin current rating.			

Table 3-49 Power supply – Pin assignment

Power supply requirements	
Output voltage	$+V_{CC}$ 10…50 VDC
Absolute output voltage	min. 8 VDC; max. 56 VDC
Output current	Depending on load • continuous max. 15 A • short-time (acceleration, <60 s) max. 30 A

Table 3-50 Power supply requirements

1) Use the formula below to calculate the required voltage under load.
2) Choose a power supply according to the calculated voltage. Thereby consider:
   a) During braking of the load, the power supply must be capable of buffering the recovered kinetic energy (for example, in a capacitor).
   b) If you are using an electronically stabilized power supply, make sure that the overcurrent protection circuit is configured inoperative within the operating range.

Continued on next page.

The formula already takes the following into account:
- *Maximum PWM duty cycle of 90%*
- *Controller's max. voltage drop of 1 V @ 15 A*

KNOWN VALUES:
- Operating torque M [mNm]
- Operating speed n [rpm]
- Nominal motor voltage U_N [Volt]
- Motor no-load speed at U_N: n_O [rpm]
- Speed/torque gradient of the motor $\Delta n/\Delta M$ [rpm/mNm]

SOUGHT VALUE:
- Supply voltage $+V_{CC}$ [Volt]

SOLUTION:

$$V_{CC} \geq \left[\frac{U_N}{n_O} \cdot \left(n + \frac{\Delta n}{\Delta M} \cdot M\right) \cdot \frac{1}{0.9}\right] + 1[V]$$

3.4.2 Logic Supply

Separate power supply
The logic part of the controller may be supplied by a separate supply voltage provided that it meets the below stated minimum requirements.
For the voltage supply observe the following:
- *Module: You will need to provide both, logic supply and power supply.*
- *Compact:*
  ***Either** use two cables, the «Power Cable» (275829) to provide the logic supply and the «Power Cable High Current» (520850) to provide the power supply.*
  ***Or** use just one cable, the «Power Cable High Current» (520850) to provide the power supply. In this case, the logic supply is internally connected to the power supply voltage.*

Module Header Pin	Compact/CB Connector Pin	Signal	Description
A17	X2 | 2	$+V_C$	Logic supply voltage (+10…+50 VDC)
A18…A22**	X2 | 1	GND	Ground
** Connect all pins in respect to the individual pin current rating.			

Table 3-51 Logic supply – Pin assignment

Power supply requirements	
Output voltage	$+V_C$ 10…50 VDC
Absolute supply voltage	min. 8 VDC; max. 56 VDC
Min. output power	P_C min. 3.5 W

Table 3-52 Logic supply requirements

3.4.3 Motor

The EPOS4 is set to drive either maxon DC motors (brushed) or maxon EC motors (brushless).

Module Header Pin	Compact/CB Connector Pin	Signal	Description
A1…A4**	X3a | 1 X3b | 1	Motor (+M)	Motor +
A5…A8**	X3a | 2 X3b | 2	Motor (−M)	Motor −
–	X3a | 3 X3b | 3	–	not connected
–	X3a | 4 X3b | 4	Motor shield	Cable shield
** Connect all pins in respect to the individual pin current rating.			

Table 3-53 DC motor – Pin assignment

Module Header Pin	Compact/CB Connector Pin	Signal	Description
A1…A4**	X3a | 1 X3b | 1	Motor winding 1	Winding 1
A5…A8**	X3a | 2 X3b | 2	Motor winding 2	Winding 2
A9…A12**	X3a | 3 X3b | 3	Motor winding 3	Winding 3
–	X3a | 4 X3b | 4	Motor shield	Cable shield
** Connect all pins in respect to the individual pin current rating.			

Table 3-54 EC motor – Pin assignment

3.4.4 Hall Sensor

Module Header Pin	Compact/CB Connector Pin	Signal	Description
A18…A22	X4 | 4	GND	Ground
A23	X4 | 1	Hall sensor 1	Hall sensor 1 input
A24	X4 | 2	Hall sensor 2	Hall sensor 2 input
A25	X4 | 3	Hall sensor 3	Hall sensor 3 input
A26	X4 | 5	V_{Sensor}	Sensor supply voltage (+5 VDC; I_L ≤100 mA)
–	X4 | 6	Hall shield	Cable shield

Table 3-55 Hall sensor – Pin assignment

Hall sensor	
Sensor supply voltage (V_{Sensor})	+5 VDC
Max. Hall sensor supply current	30 mA
Input voltage	0…24 VDC
Max. input voltage	+24 VDC
Logic 0	typically <0.8 V
Logic 1	typically >2.0 V
Internal pull-up resistor	10 kΩ (referenced to +5.45 V)

Table 3-56 Hall sensor specification

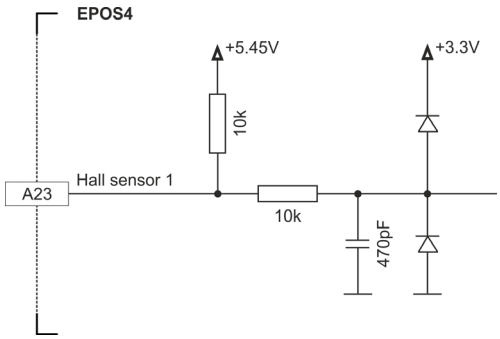

Figure 3-28 Hall sensor 1 input circuit (analogously valid for Hall sensors 2 & 3)

3.4.5 Encoder

Best practice

- *Differential signals offer good resistance against electrical interference. Therefore,* ***we recommend using a differential scheme****. Nevertheless, the controller supports both schemes – differential and single-ended (unsymmetrical).*
- *For best performance,* ***we strongly recommend using encoders with a line driver****. Otherwise, limitations may apply due to slow switching edges.*
- *Even though 2-channel will do,* ***we strongly recommend to use only 3-channel versions****.*

Module Header Pin	Compact/CB Connector Pin	Signal	Description
A18…A22	X5 | 3	GND	Ground
A26	X5 | 2	V_{Sensor}	Sensor supply voltage (+5 VDC; I_L ≤100 mA)
A27	X5 | 6	Channel A	Digital incremental encoder channel A
A28	X5 | 5	Channel A\	Digital incremental encoder channel A complement
A29	X5 | 8	Channel B	Digital incremental encoder channel B
A30	X5 | 7	Channel B\	Digital incremental encoder channel B complement
A31	X5 | 10	Channel I	Digital incremental encoder channel I
A32	X5 | 9	Channel I\	Digital incremental encoder channel I complement

Table 3-57 Encoder – Pin assignment

Continued on next page.

Encoder (differential)	
Sensor supply voltage (V_{Sensor})	+5 VDC
Max. encoder supply current	70 mA
Min. differential input voltage	±200 mV
Max. input voltage	±12 VDC
Line receiver (internal)	EIA RS422 standard
Max. input frequency	6.25 MHz

Table 3-58 Differential encoder specification

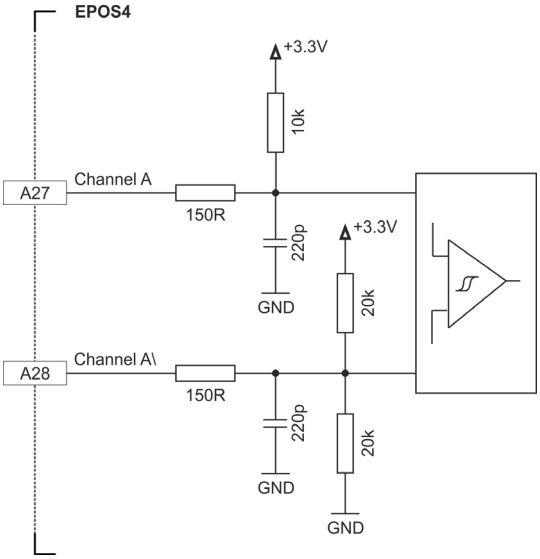

Figure 3-29 Encoder input circuit Ch A “differential” (analogously valid for Ch B & Ch I)

Encoder (single-ended)		
Sensor supply voltage (V_{Sensor})		+5 VDC
Max. encoder supply current		70 mA
Input voltage		0…5 VDC
Max. input voltage		±12 VDC
Logic 0		<1.0 V
Logic 1		>2.4 V
Input high current		I_{IH} = typically +250 µA @ 5 V
Input low current		I_{IL} = typically −330 µA @ 0 V
Max. input frequency	Open collector	6.25 MHz
	Push-pull	40 kHz (internal pull-up only) 150 kHz (additional external 3k3 pull-up)

Table 3-59 Single-ended encoder specification

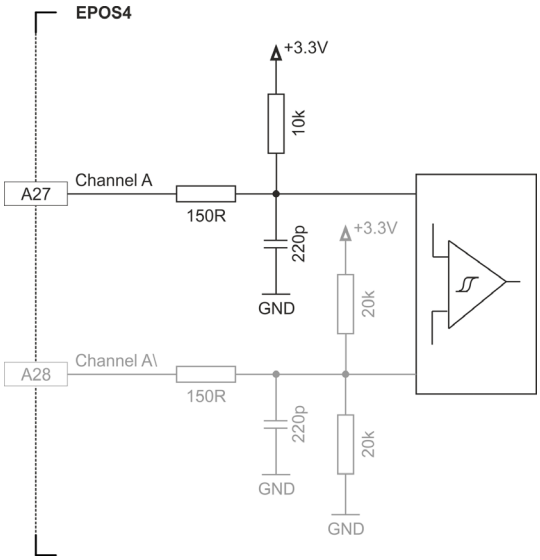

Figure 3-30 Encoder input circuit Ch A “single-ended” (analogously valid for Ch B & Ch I)

3.4.6 Sensor

Check on the applied sensor's data sheet
If the specified inrush current or the maximum continuous current of the sensor should exceed 150 mA, you can connect the sensor supply voltage (V_{Sensor}) in parallel to the auxiliary output voltage (V_{Aux}).

3.4.6.1 Incremental Encoder

Module Header Pin	Compact/CB Connector Pin	Signal	Description
B7	X6 | 1	Channel A	Digital/analog incremental encoder channel A
B8	X6 | 2	Channel A\	Digital/analog incremental encoder channel A complement
B9	X6 | 3	Channel B	Digital/analog incremental encoder channel B
B10	X6 | 4	Channel B\	Digital/analog incremental encoder channel B complement
B11	X6 | 5	Channel I	Digital/analog incremental encoder channel I
B12	X6 | 6	Channel I\	Digital/analog incremental encoder channel I complement
B15	X6 | 10	V_{Aux}	Auxiliary output voltage (+5 VDC; I_L ≤150 mA)
B16	X6 | 9	GND	Ground

Table 3-60 Incremental encoder – Pin assignment

Digital incremental encoder (differential)	
Auxiliary output voltage (V_{Aux})	+5 VDC
Max. auxiliary supply current	150 mA
Min. differential input voltage	±200 mV
Max. input voltage	+12 VDC
Line receiver (internal)	EIA RS422 standard
Max. input frequency	6.25 MHz

Table 3-61 Differential digital incremental encoder specification

Continued on next page.

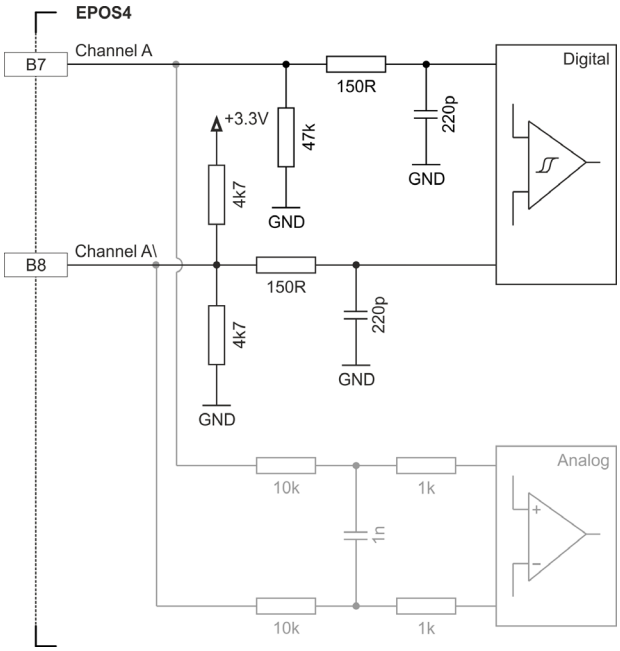

Figure 3-31 Digital incremental encoder input circuit Ch A “differential” (analogously valid for Ch B)

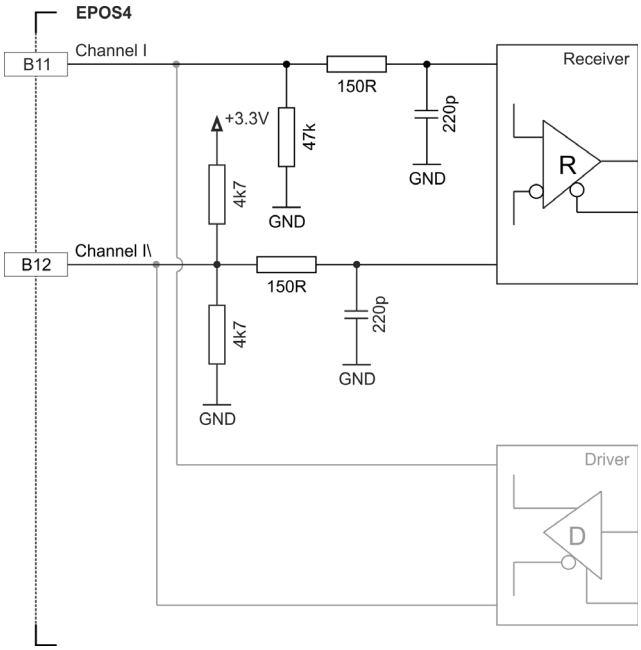

Figure 3-32 Digital incremental encoder input circuit Ch I

Digital incremental encoder (single-ended)		
Auxiliary output voltage (V_{Aux})		+5 VDC
Max. auxiliary supply current		150 mA
Input voltage		0…5 VDC
Max. input voltage		±12 VDC
Logic 0		<1.0 V
Logic 1		>2.4 V
Input high current		typically 210 µA @ +5 VDC (channel A, B) typically 60 µA @ +5 VDC (channel I)
Input low current		typically −80 µA @ 0 VDC (channel A, B) typically −7 µA @ 0 VDC (channel I)
Max. input frequency	Open collector	6.25 MHz
	Push-pull	100 kHz (additional external 3k3 pull-up)

Table 3-62 Single-ended digital incremental encoder specification

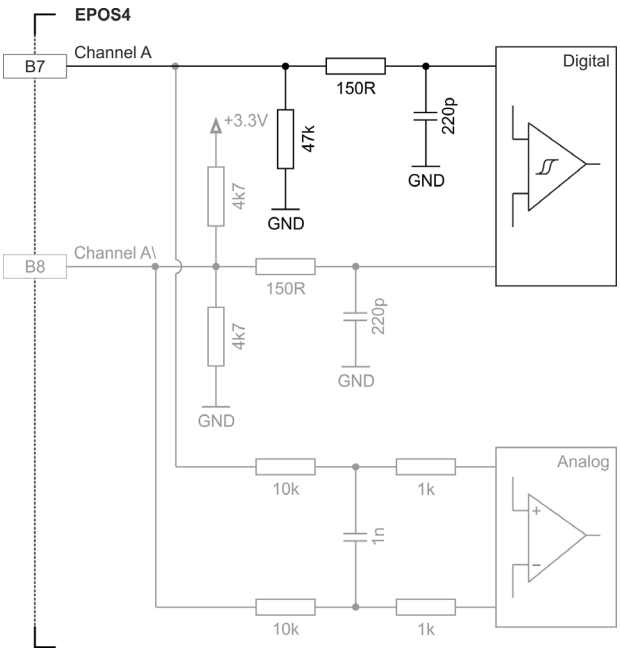

Figure 3-33 Digital incremental encoder input circuit Ch A “single-ended” (analogously valid for Ch B)

Continued on next page.

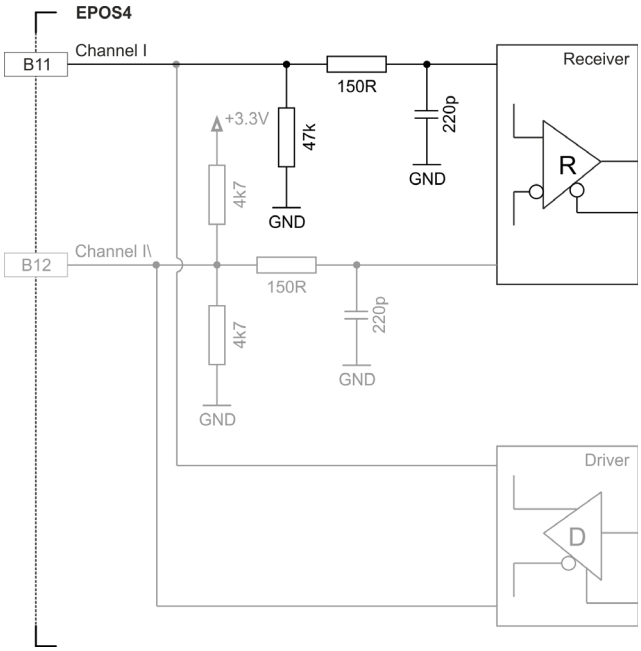

Figure 3-34 Digital incremental encoder input circuit Ch I

Analog incremental encoder SinCos (differential)	
Auxiliary output voltage (V_{Aux})	+5 VDC
Max. auxiliary supply current	150 mA
Input voltage	±1.8 V (differential)
Max. input voltage	±12 VDC
Common mode voltage	−9…+4 VDC (referenced to GND)
Input resistance	typically 10 kΩ
A/D converter	12-bit
Resolution	0.88 mV
Bandwidth	10 kHz

Table 3-63 Differential analog incremental encoder specification

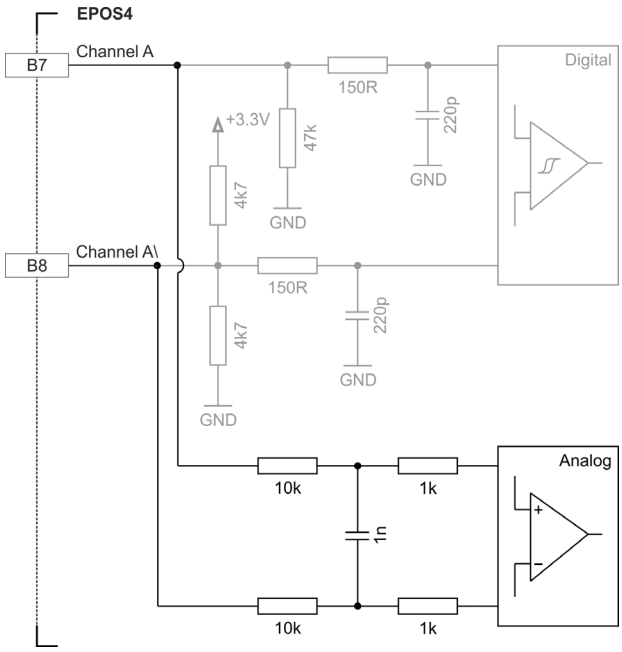

Figure 3-35 Analog incremental encoder input circuit Ch A “differential” (analogously valid for Ch B)

Continued on next page.

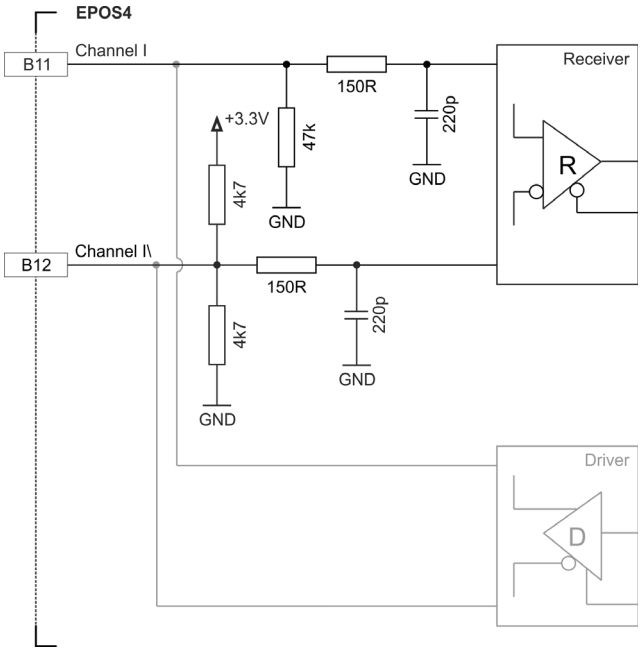

Figure 3-36 Analog incremental encoder input circuit Ch I (digital evaluation)

3.4.6.2 SSI Absolute Encoder

Module Header Pin	Compact/CB Connector Pin	Signal	Description
B11	X6 | 5	Clock	Clock (SSI)
B12	X6 | 6	Clock\	Clock (SSI) complement
B13	X6 | 7	Data	Data (SSI)
B14	X6 | 8	Data\	Data (SSI) complement
B15	X6 | 10	V_{Aux}	Auxiliary output voltage (+5 VDC; I_L ≤150 mA)
B16	X6 | 9	GND	Ground

Table 3-64 SSI absolute encoder – Pin assignment

SSI absolute encoder	
Auxiliary output voltage (V_{Aux})	+5 VDC
Max. auxiliary supply current	150 mA
Min. differential input voltage	±200 mV
Min. differential output voltage	±1.8 V @ external load R=54 Ω
Max. output current	40 mA
Line receiver (internal)	EIA RS422 standard
Encoder input/output frequency	0.4… 2 MHz

Table 3-65 SSI absolute encoder specification

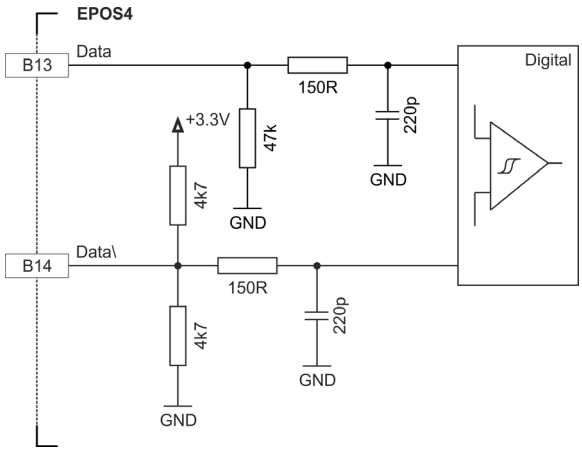

Figure 3-37 SSI absolute encoder data input

Continued on next page.

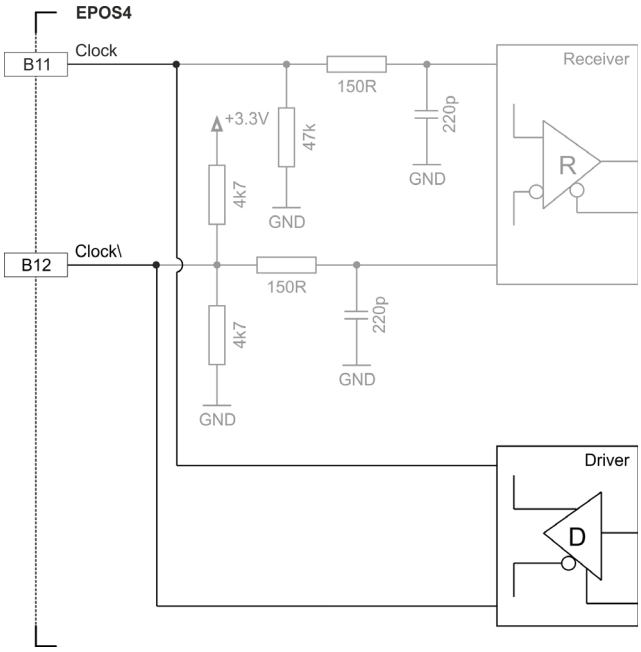

Figure 3-38 SSI absolute encoder clock output

3.4.6.3 High-speed Digital I/Os

Alternatively, the sensor interface can be used for high-speed digital I/O operation.

Module Header Pin	Compact/CB Connector Pin	Signal	Description
B7	X6 | 1	HsDigIN1	High-speed digital input 1
B8	X6 | 2	HsDigIN1\	High-speed digital input 1 complement
B9	X6 | 3	HsDigIN2	High-speed digital input 2
B10	X6 | 4	HsDigIN2\	High-speed digital input 2 complement
B11	X6 | 5	HsDigIN3	High-speed digital input 3
		HsDigOUT1	High-speed digital output 1
B12	X6 | 6	HsDigIN3\	High-speed digital input 3 complement
		HsDigOUT1\	High-speed digital output 1 complement
B13	X6 | 7	HsDigIN4	High-speed digital input 4
B14	X6 | 8	HsDigIN4\	High-speed digital input 4 complement
B15	X6 | 10	V_{Aux}	Auxiliary output voltage (+5 VDC; I_L ≤150 mA)
B16	X6 | 9	GND	Ground

Table 3-66 High-speed digital I/Os – Pin assignment

High-speed digital input 1…4 (differential)	
Max. input voltage	±12 VDC
Min. differential input voltage	±200 mV
Line receiver (internal)	EIA RS422 standard
Max. input frequency	6.25 MHz

Table 3-67 Differential high-speed digital input specification

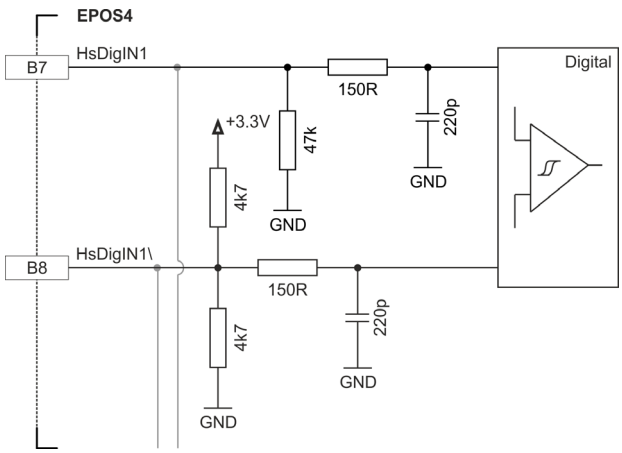

Figure 3-39 HsDigIN1 circuit “differential” (analogously valid for HsDigIN2…4)

High-speed digital input 1…4 (single-ended)	
Input voltage	0…5 VDC
Max. input voltage	±12 VDC
Logic 0	<1.0 V
Logic 1	>2.4 V
Input high current	typically 210 µA @ +5 VDC (HsDigIN1, 2) typically 60 µA @ +5 VDC (HsDigIN3, 4)
Input low current	typically −80 µA @ 0 VDC (HsDigIN1, 2) typically −7 µA @ 0 VDC (HsDigIN3, 4)
Max. input frequency	6.25 MHz

Table 3-68 Single-ended high-speed digital input specification

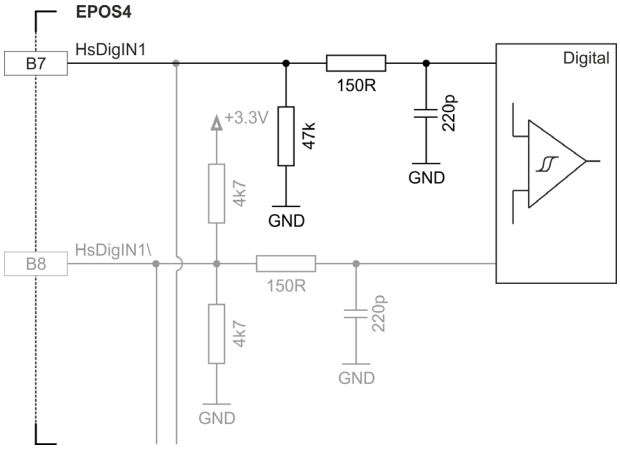

Figure 3-40 HsDigIN1 circuit “single-ended” (analogously valid for HsDigIN2…4)

High-speed digital output 1	
Min. differential output voltage	±1.8 V @ external load R=54 Ω
Max. output current	40 mA
Line transceiver (internal)	EIA RS422 standard
Max. output frequency	6.25 MHz

Table 3-69 High-speed digital output specification

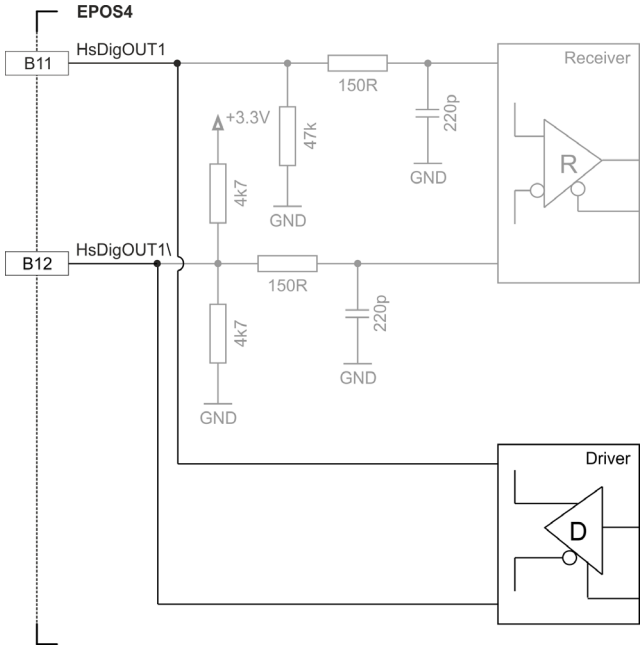

Figure 3-41 HsDigOUT1 output circuit

3.4.7 Digital I/Os

3.4.7.1 Module

Module Header Pin	Signal	Description
B1	DigIN1	Digital input 1
B2	DigIN2	Digital input 2
B3	DigIN3	Digital input 3
B4	DigIN4	Digital input 4
B5	DigOUT1	Digital output 1
B6	DigOUT2	Digital output 2
B15	V_{Aux}	Auxiliary output voltage (+5 VDC; I_L ≤150 mA)
B16	GND	Ground

Table 3-70 Digital I/Os – Pin assignment – Module

Digital inputs 1…4 (Module)	
Input voltage	0…36 VDC
Max. input voltage	±36 VDC
Logic 0	<0.8 V
Logic 1	>2.1 V
Input resistance	typically 47 kΩ (<3.3 V) typically 37.5 kΩ (@ 5 V) typically 25.5 kΩ (@ 24 V)
Input current at logic 1	typically 135 µA @ +5 VDC
Switching delay	<300 µs

Table 3-71 Digital input specification

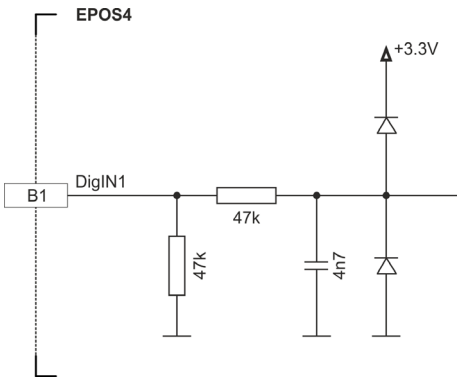

Figure 3-42 DigIN1 circuit (analogously valid for DigIN2…4) – Module

3.4.7.2 Compact

Compact/CB Connector Pin	Signal	Description
X7 | 1	DigIN1	Digital input 1
X7 | 2	DigIN2	Digital input 2
X7 | 3	DigIN3	Digital input 3
X7 | 4	DigIN4	Digital input 4
X7 | 5	DigOUT1	Digital output 1
X7 | 6	DigOUT2	Digital output 2
X7 | 7	GND	Ground
X7 | 8	V_{Aux}	Auxiliary output voltage (+5 VDC; I_L ≤150 mA)

Table 3-72 Digital I/Os – Pin assignment – Compact

Digital inputs 1…4 (Compact / Logic level setting)	
Input voltage	0…30 VDC
Max. input voltage	±30 VDC
Logic 0	<0.8 V
Logic 1	>2.0 V
Input current at logic 1	250 µA @ 5 VDC
Switching delay	<300 µs @ 5 VDC

Table 3-73 Digital input specification – Logic level setting

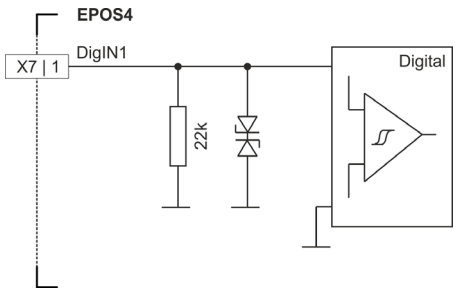

Figure 3-43 DigIN1 circuit (analogously valid for DigIN2…4) – Compact / Logic level setting

Continued on next page.

Digital inputs 1…4 (Compact / PLC level setting)	
Input voltage	0…30 VDC
Max. input voltage	±30 VDC
Logic 0	<5.5 V
Logic 1	>9 V
Input current at logic 1	>2 mA @ 9 VDC typically 3.5 mA @ 24 VDC
Switching delay	<300 µs @ 24 VDC

Table 3-74 Digital input specification – PLC level setting

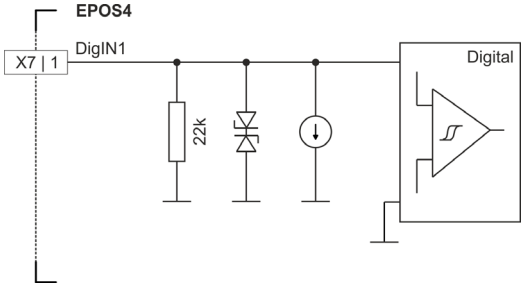

Figure 3-44 DigIN1 circuit (analogously valid for DigIN2…4) – Compact / PLC level setting

For pin assignment of digital outputs ➔Table 3-70 and Table 3-72.

Digital outputs 1…2	
Circuit	Open drain (internal pull-up resistor 2k2 and diode to +5.45 VDC

Table 3-75 Digital output specification

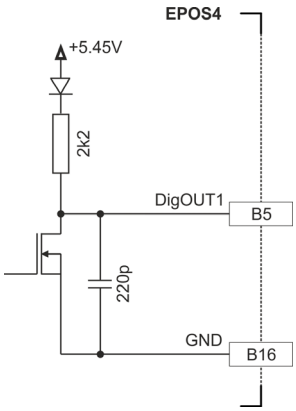

Figure 3-45 DigOUT1 circuit (analogously valid for DigOUT2 and Compact)

Continued on next page.

WIRING EXAMPLES

DigOUT “sinks”	
Max. input voltage	+36 VDC
Max. load current	500 mA
Max. voltage drop	0.5 V @ 500 mA
Max. load inductance	100 mH @ 24 VDC; 500 mA

Table 3-76 Digital output – Sinks

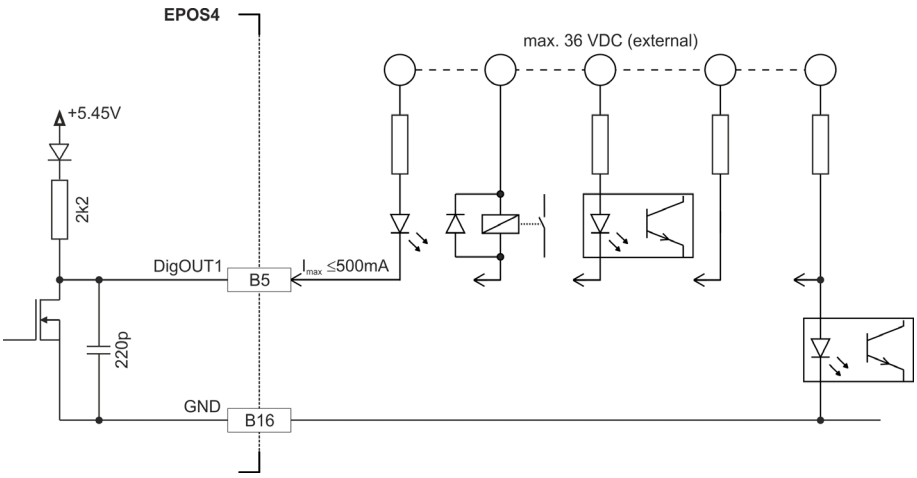

Figure 3-46 DigOUT1 “sinks” (analogously valid for DigOUT2 and Compact)

DigOUT “source”	
Output voltage	U_{Out} = 5.45 V − 0.75 V − (I_{Load} x 2200 Ω)
Max. load current	I_{Load} ≤2 mA

Table 3-77 Digital output – Source

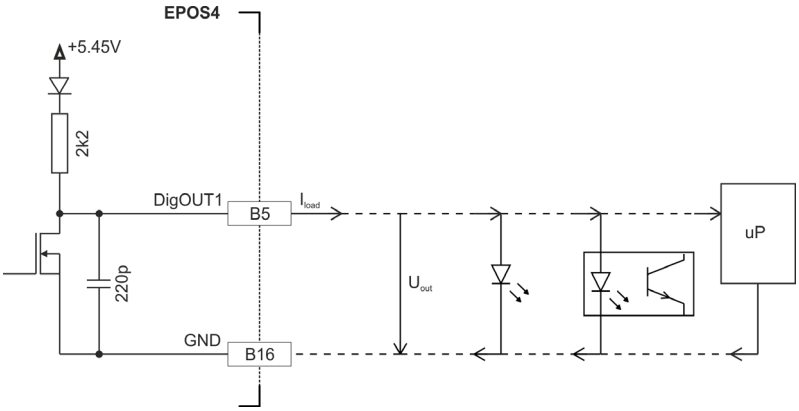

Figure 3-47 DigOUT1 “source” (analogously valid for DigOUT2 and Compact)

3.4.8 Safe Torque Off I/Os

The STO (Safe Torque Off) function can be utilized to bring the drive to a torque-free, safe condition via two independent inputs. The drive output power stage is switched off if either one of the inputs is not powered.

For in-depth details on the STO functionality see separate document ➔«EPOS4 Application Notes».

Non-certified STO functionality
The implemented STO functionality will not be certified.

Activation of power stage
*In order to activate the power stage, **both** STO inputs must be powered.*

Module Header Pin	Compact/CB Connector Pin	Signal	Description
–	X9 | 8	V_{STO}	Activation voltage for STO inputs (+5 VDC) ***Note:*** *Do not use this voltage for any other purpose*
B15	–	V_{Aux}	Auxiliary output voltage (+5 VDC; I_L ≤150 mA)
B16	X9 | 7	GND	Ground
B17	X9 | 1	STO-IN1+	Safe Torque Off input 1, positive signal
B18	X9 | 2	STO-IN1−	Safe Torque Off input 1, negative signal
B19	X9 | 3	STO-IN2+	Safe Torque Off input 2, positive signal
B20	X9 | 4	STO-IN2−	Safe Torque Off input 2, negative signal
B21	X9 | 5	STO-OUT+	Safe Torque Off output, positive signal
B22	X9 | 6	STO-OUT−	Safe Torque Off output, negative signal

Table 3-78 STO I/Os – Pin assignment

Safe Torque Off inputs 1…2	
Circuit type	Optically isolated input
Input voltage	0…+30 VDC
Max. input voltage	±30 VDC
Logic 0	<1.0 VDC
Logic 1	>4.5 VDC
Input current at logic 1	>2 mA @ 5 VDC typically 3.2 mA @ 24 VDC
Reaction time	<25 ms

Table 3-79 STO input specification

Continued on next page.

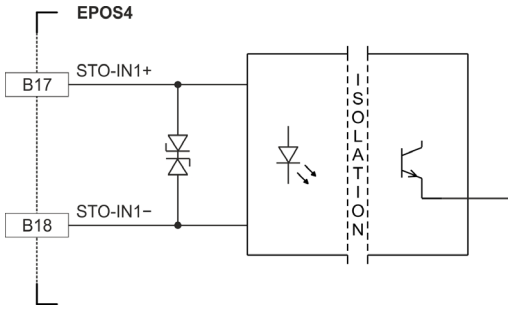

Figure 3-48 STO-IN1 circuit (analogously valid for STO-IN2)

Safe Torque Off output	
Circuit type	Optically isolated output with self-resetting short-circuit protection
Max. input voltage	±30 VDC
Max. load current	15 mA
Leakage current	<10 µA @ +30 VDC
Max. voltage drop	1.3 V @ 2 mA 2.5 V @ 15 mA

Table 3-80 STO output specification

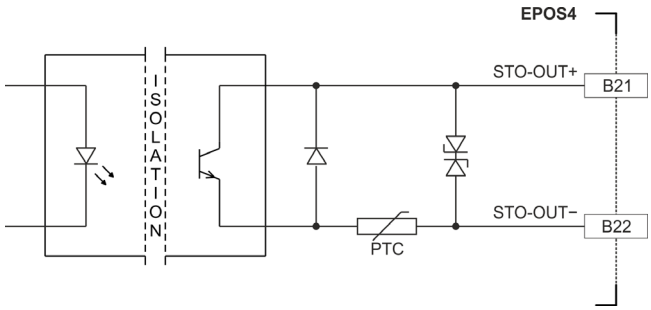

Figure 3-49 STO-OUT circuit

STO Logic State			
STO-IN1	**STO-IN2**	**STO-OUT**	**Power Stage**
0	0	open	inactive
1	0	closed	inactive
0	1	closed	inactive
1	1	closed	active

Table 3-81 STO logic state

3.4.9 Analog I/Os

Module Header Pin	Compact/CB Connector Pin	Signal	Description
B16	X8 | 7	GND	Ground
B23	X8 | 1	AnIN1+	Analog input 1, positive signal
B24	X8 | 2	AnIN1−	Analog input 1, negative signal
B25	X8 | 3	AnIN2+	Analog input 2, positive signal
B26	X8 | 4	AnIN2−	Analog input 2, negative signal
B27	X8 | 5	AnOUT1	Analog output 1
B28	X8 | 6	AnOUT2	Analog output 2

Table 3-82 Analog I/Os – Pin assignment

Analog inputs 1…2	
Input voltage	±10 VDC (differential)
Max. input voltage	±24 VDC
Common mode voltage	−5…+10 VDC (referenced to GND)
Input resistance	80 kΩ (differential) 65 kΩ (referenced to GND)
A/D converter	12-bit
Resolution	5.64 mV
Bandwidth	10 kHz

Table 3-83 Analog input specification

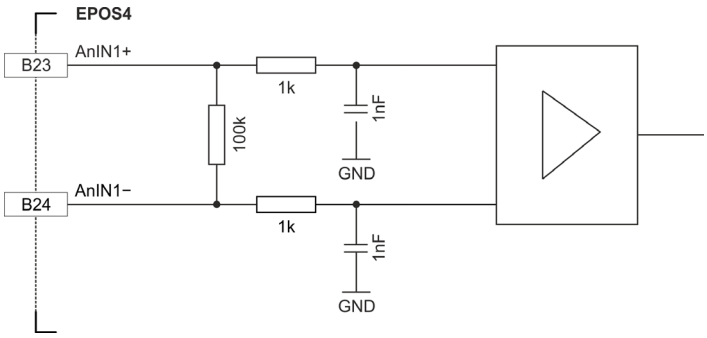

Figure 3-50 AnIN1 circuit (analogously valid for AnIN2)

Analog outputs 1…2	
Output voltage	±4 VDC
D/A converter	12-bit
Resolution	2.42 mV
Refresh rate	2.5 kHz
Analog bandwidth of output amplifier	25 kHz
Max. capacitive load	300 nF ***Note:*** *The increase rate is limited in proportion to the capacitive load (e.g. 5 V/ms @ 300 nF)*
Max. output current limit	1 mA

Table 3-84 Analog output specification

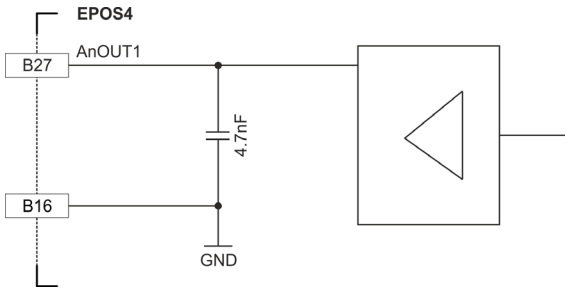

Figure 3-51 AnOUT1 circuit (analogously valid for AnOUT2)

3.4.10 Serial Communication Interface (SCI) / RS232

The SCI is a two-wire asynchronous serial port, commonly known as a UART. The SCI modules support digital communication between the CPU and other asynchronous peripherals that use the standard non-return-to-zero (NRZ) format.

A common use of the Module's SCI is to build an RS232 interface by wiring it to an RS232 transceiver. Alternatively, using any of the Compact versions does not require an external transceiver.

Bit rate settings

- *Consider the master's maximal bite rate.*
- *The standard bit rate setting (factory setting) is 115'200 bit/s.*

3.4.10.1 Module

Module Header Pin	Signal	Description
B38	GND	Ground
B39 [e]	DSP_RxD	Serial communication interface receive (UART)
B40	DSP_TxD	Serial communication interface transmit (UART)
[e] connect to sensor supply voltage V_{Sensor} (A26) when RS232 is not in use		

Table 3-85 SCI – Pin assignment

Serial Communication Interface (SCI)	
Input voltage	0…3.3 VDC
Max. input voltage	5 VDC
High-level input voltage	>2.0 VDC
Low-level input voltage	<0.8 VDC
High-level output voltage	>2.4 VDC
Low-level output voltage	<0.4 VDC
Series resistance (both lines)	10 kΩ
Max. bit rate	115'200 bit/s
Data format	NRZ (non-return-to-zero)

Table 3-86 SCI specification

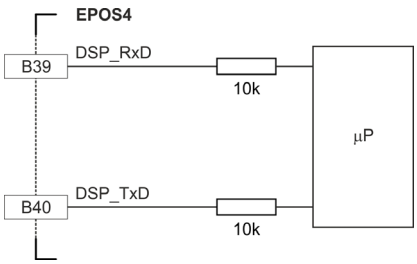

Figure 3-52 SCI circuit

3.4.10.2 Compact CAN

Compact/CB Connector Pin	Signal	Description
X10 | 1	EPOS_RxD	EPOS RS232 receive
X10 | 2	GND	Ground
X10 | 3	EPOS_TxD	EPOS RS232 transmit
X10 | 4	GND	Ground
X10 | 5	Shield	Cable shield

Table 3-87 RS232 – Pin assignment

RS232 Interface	
Max. input voltage	±30 VDC
Output voltage	typically ±9 V @ 3 kΩ to GND
Max. bit rate	115’200 bit/s
RS232 transceiver	EIA RS232 standard

Table 3-88 RS232 interface specification

3.4.11 CAN Interface / ID Setting

3.4.11.1 Connection

The EPOS4 is specially designed being commanded and controlled via a Controller Area Network (CAN), a highly efficient data bus very common in all fields of automation and motion control. It is preferably used as a slave node in the CANopen network.

Module Header Pin	Compact/CB Connector Pin	Signal	Description
B35	X11 | 1 X12 | 1	CAN high	CAN high bus line
B36	X11 | 2 X12 | 2	CAN low	CAN low bus line
B37	X11 | 3 X12 | 3	GND	Ground
–	X11 | 4 X12 | 4	Shield	Cable shield

Table 3-89 CAN bus line / CAN 1 / CAN 2 – Pin assignment

CAN interface		
Standard	ISO 11898-2:2003	
Max. bit rate	1 Mbit/s	
Max. number of CAN nodes	127/31 (via software/hardware setting)	
Protocol	CiA 301 version 4.2.0	
Node-ID setting	Module	By external wiring or software
	Compact CAN	By DIP switch or software

Table 3-90 CAN interface specification

Note

- *Consider the CAN master's maximal bit rate.*
- *The standard bit rate setting (factory setting) is 1 Mbit/s. For connector boards and Compact CAN versions, automatic bit rate detection is set.*
- *Use 120 Ω termination resistor at both ends of the CAN bus.*
- *For detailed CAN information see separate document ➔«EPOS4 Communication Guide».*

3.4.11.2 Configuration

Setting the ID is currently available for CAN only!

The device's identification (subsequently called "ID") can be set by different means:

- For configuration on **Compact** versions ➔"DIP Switch Configuration (SW1)" on page 3-43.
- For configuration on **Module** versions, the ID is set using the input lines ID1…ID5. The ID (1…31) may be coded using binary code.

Module Header Pin	Signal	Description	Binary Code	Valence
B29	ID 1	CAN ID / DEV ID 1	2^0	1
B30	ID 2	CAN ID / DEV ID 2	2^1	2
B31	ID 3	CAN ID / DEV ID 3	2^2	4
B32	ID 4	CAN ID / DEV ID 4	2^3	8
B33	ID 5	CAN ID / DEV ID 5	2^4	16
B37	GND	Ground		

Table 3-91 ID – Pin assignment

CAN ID / DEV ID	
Max. input voltage	3.3 VDC
Logic 1	connected to GND
Logic 0	not connected

Table 3-92 CAN ID / DEV ID specification

Important
The internal circuit of the ID pins (B29…B33) is based on an analog voltage measurement. Ensure a proper ground connection (0.0 V) when Logic 1 state is intended and a high impedance for Logic 0 state.

Continued on next page.

The set ID can be observed by adding the valences of all inputs connected externally to GND. Use the following table as a (non-concluding) guide:

CAN ID / DEV ID					ID
1	**2**	**3**	**4**	**5**	
0*	0	0	0	0	–
1**	0	0	0	0	1
0	**1**	0	0	0	2
0	0	**1**	0	0	4
1	0	**1**	0	0	5
0	0	0	**1**	0	8
0	0	0	0	**1**	16
1	**1**	**1**	**1**	**1**	31
0* = ID input line not connected		1** = ID input line externally connected to GND			

Table 3-93 ID – Examples

Setting the ID by means of «EPOS Studio»

- *The ID may be set by software (changing object 0x2000 «Node-ID», range 1…127).*
- *The ID set by software is valid if the ID is set to "0" (none of the ID input lines connected).*

CAN AUTOMATIC BIT RATE DETECTION

With this function, the CANopen interface can be put in a "listen only" mode. For further details see separate document ➔«EPOS4 Firmware Specification». Automatic bit rate detection is activated when the input line is externally connected to GND.

Bit rate detection	
Auto Bit Rate GND	Pin B34 Pin B38
Max. input voltage	3.3 VDC
Logic 1	connected to GND
Logic 0	not connected

Table 3-94 Bit rate detection specification

3.4.12 Serial Peripheral Interface (SPI)

The SPI is a high-speed synchronous serial input/output port allowing the use of optional maxon extension modules.

Note
Do not connect any other signals to the SPI apart from those for the maxon extension modules!

Module Header Pin	Signal	Description
B38	GND	Ground
B41	SPI_CLK	Serial Peripheral Interface clock
B42	SPI_IRQ	Serial Peripheral Interface interrupt request
B43	SPI_SOMI	Serial Peripheral Interface Slave output, Master input
B44	SPI_SIMO	Serial Peripheral Interface Slave input, Master output
B45	SPI_CS2	Serial Peripheral Interface chip select 2
B46	SPI_CS1	Serial Peripheral Interface chip select 1

Table 3-95 SPI – Pin assignment

3.4.13 USB (X13)

Hot plugging the USB interface may cause hardware damage

If the USB interface is being hot-plugged (connecting while the power supply is on), the possibly high potential differences of the two power supplies of controller and PC/Notebook can lead to damaged hardware.

- *Avoid potential differences between the power supply of controller and PC/Notebook or, if possible, balance them.*
- *Insert the USB connector first, then switch on the power supply of the controller.*

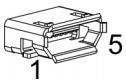

Figure 3-53 USB connector X13

Compact Connector Pin	PC's USB Terminal	Signal	Description
X13 | 1	1	V_{BUS}	USB bus supply voltage input +5 VDC
X13 | 2	2	USB_D−	USB Data− (twisted pair with Data+)
X13 | 3	3	USB_D+	USB Data+ (twisted pair with Data−)
X13 | 4	–	ID	not connected
X13 | 5	4	GND	USB ground

Table 3-96 USB connector X13 – Pin assignment

USB Type A - micro B Cable (403968)	
Cross-section	According to USB 2.0 / USB 3.0 specification
Length	1.5 m
Head A	USB Type "micro B", male
Head B	USB Type "A", male

Table 3-97 USB Type A - micro B Cable

USB	
USB Standard	USB 2.0 / USB 3.0 (full speed)
Max. bus supply voltage	+5.25 VDC
Max. DC data input voltage	−0.5…+3.8 VDC

Table 3-98 USB interface specification

3.5 Status Indicators

The EPOS4 features three sets of LED indicators to display the device condition.

- **A** **NET Status**; the LEDs display communication RUN states and errors conditions
- **B** **Device Status**; the LEDs display the device's operation status and error conditions
- **C** **EtherCAT Port**; the LED displays the NET link activity

For detailed information see separate document ➔«EPOS4 Firmware Specification».

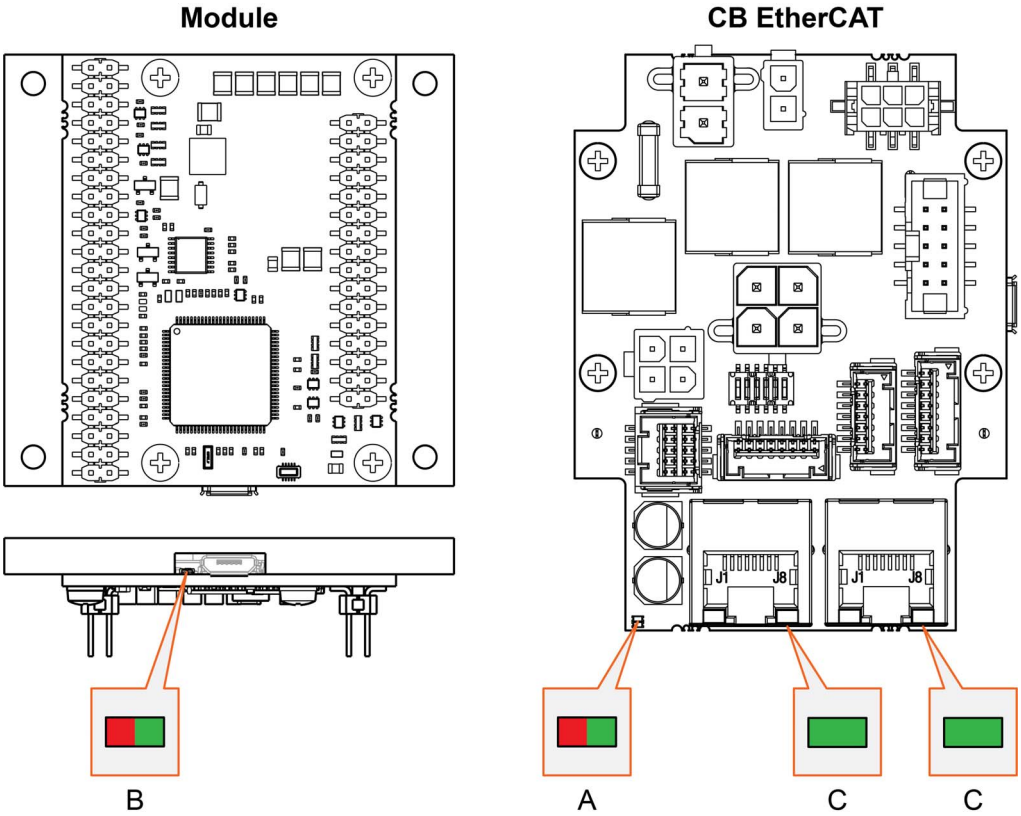

Figure 3-54 LEDs – Location

3.5.1 NET Status

The LEDs (➔Figure 3-54; **A**) display the actual status and possible errors of the EPOS4 in respect to the NET network:

- Green LED shows the RUN state
- Red LED indicates errors

LED		Description
Green	**Red**	
OFF	—	EPOS4 is in state INIT
Blink	—	EPOS4 is in state PRE-OPERATIONAL
Single flash	—	EPOS4 is in state SAFE-OPERATIONAL
ON	—	EPOS4 is in state OPERATIONAL
Flicker	—	EPOS4 is in state BOOTSTRAP
—	OFF	EPOS4 is in operating condition
—	Double flash	An application watchdog timeout has occurred *Example: Timeout of Sync Manager Watchdog*
—	Single flash	EPOS4 has changed the COM state due to an internal error *Example: Change of state "Op" to "SafeOpError" due to Sync Error*
—	Blink	General Configuration Error *Example: State change commanded by master is not possible due to actual settings (register, object, hardware configuration)*
Blink = continuous blinking (≈2.5 Hz) Flash = flashing (≈0.2 s), followed by pause of 1 s Flicker = continuous flickering (≈10Hz)		

Table 3-99 NET Status LEDs

3.5.2 Device Status

The LEDs (➔Figure 3-54; **B**) display the actual status and possible errors of the EPOS4:

- Green LED shows the status
- Red LED indicates errors

LED		Description
Green	**Red**	
Slow	OFF	Power stage is disabled. The EPOS4 is in status… • "Switch ON Disabled" • "Ready to Switch ON" • "Switched ON"
ON	OFF	Power stage is enabled. The EPOS4 is in status… • "Operation Enable" • "Quick Stop Active"
OFF	ON	FAULT state. The EPOS4 is in status… • "Fault"
ON	ON	Power stage is enabled. The EPOS4 is in temporary status… • "Fault Reaction Active"
Flash	ON	No valid firmware or firmware download in progress
Flash = flashing (≈0.9 s OFF/≈0.1 s ON) Slow = slow blinking (≈1 Hz)		

Table 3-100 Device Status LEDs

3.5.3 EtherCAT Port

The LED (➔Figure 3-54; **C**) displays the link activity of the EtherCAT port (applies for both ports, X14 “IN” and X15 “OUT”):

- Green LED indicates link activity

LED Green	Description
OFF	Port is closed
Flicker	Port is open / activity is present
ON	Port is open
—	Data rate is 100 Mbit/s
Flicker = continuous flickering (≈10 Hz)	

Table 3-101 EtherCAT Port LED

••page intentionally left blank••

4 MOTHERBOARD DESIGN GUIDE

The «Motherboard Design Guide» provides helpful information on integrating the Module on a printed circuit board. It contains recommendations for the motherboard layout and specifies external components that may be required, pin assignments, and connection examples.

CAUTION

Dangerous Action
Errors in implementing the design can result in serious Injury!

- *Only proceed if you are skilled in electronics design!*
- *Designing a printed circuit board requires special skills and knowledge and may only be performed by experienced electronic developers!*
- *This quick guide is only intended as an aid, does not make any claim to completeness, and will not automatically result in a functional component!*

Get help
If you are not trained in the design and development of printed circuit boards, you will need additional support for this point.
maxon will be happy to provide you with a quote for designing and manufacturing a motherboard for your specific application.

4.1 Requirements for Components of Third-party Suppliers

Best practice
For references and recommended components consult ➔Table 4-102.

4.1.1 Socket Headers

The Module's implementation with pin headers permits mounting in two different ways. It can either be plugged onto a socket header or be directly soldered to a printed circuit board.

4.1.2 Supply Voltage

To protect the Module, we recommend using an external circuit breaker, a TVS diode, and a capacitor in the voltage supply cable. In this regard, please note the following recommendations:

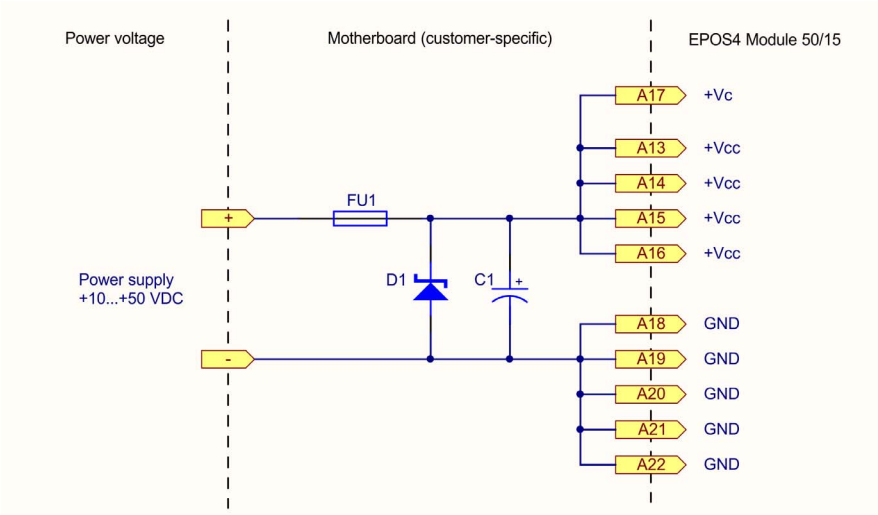

Figure 4-55 Wiring of power supply

INPUT FUSE (FU1)

An input fuse (FU1) is necessary in order to provide reverse polarity protection. Together with an unipolar TVS diode (D1), this prevents current from flowing in the wrong direction.

TVS DIODE (D1)

To protect against overvoltage resulting from voltage transients, we recommend to connect a TVS (transient voltage suppressor) diode (D1) to the voltage supply line.

CAPACITOR (C1)

The function of the Module does not necessarily require the use of an external capacitor. Nevertheless, to further reduce voltage ripple or to buffer feedback currents (typically present during motor deceleration), an electrolytic capacitor (C1) can be connected to the voltage supply line. Use of an electrolytic capacitor is also recommended to avoid oscillations caused by supply cable inductance or by the Module's built-in capacitors that could lead to a voltage overshoot at power plug-in.

4.1.3 Logic Supply Voltage

The Module features a logic supply voltage input. Its voltage range is 10…50 V and must be either sourced separately or by the power supply voltage.

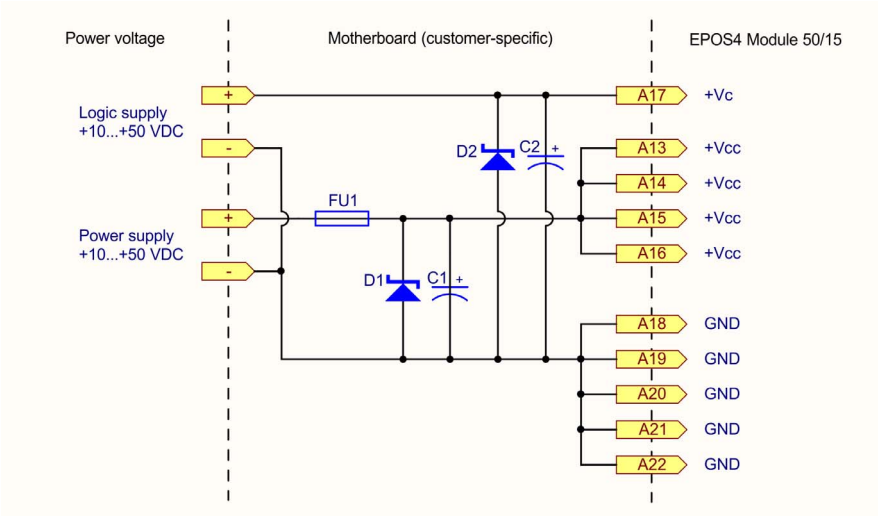

Figure 4-56 Wiring of logic supply

TVS DIODE (D2)

If the logic supply voltage is sourced separately, a transient voltage suppressor diode (D2) at the logic supply voltage input can be connected to protect the module against overvoltage.

CAPACITOR (C2)

Use an electrolytic capacitor (C2) if the logic supply is sourced separately. This will avoid oscillations caused by supply cable inductance or the Module's built-in capacitors that could lead to a voltage overshoot at power plug-in.

4.1.4 Motor Cables and Motor Chokes

The Module is not equipped with internal motor chokes.
The majority of motors and applications do not require additional chokes. However, in case of high supply voltage with very low terminal inductance, the ripple of the motor current can reach an unacceptably high value. This causes the motor to heat up unnecessarily and causes instable control behavior. The minimum terminal inductance required per phase can be calculated using the following formula:

$$L_{Phase} \geq \frac{1}{2} \cdot \left(\frac{V_{CC}}{6 \cdot f_{PWM} \cdot I_N} - (0.3 \cdot L_{Motor}) \right)$$

$L_{Phase}[H]$	Additional external inductance per phase
$V_{CC}[V]$	Operating voltage $+V_{CC}$
$f_{PWM}[Hz]$	Switching frequency of the power stage = 50’000 Hz
$I_N[A]$	Nominal current of the motor (➔line 6 in the maxon catalog)
$L_{Motor}[H]$	Terminal inductance of the motor (➔line 11 in the maxon catalog)

If the result of the calculation is negative, no additional chokes are necessary. Nevertheless, the use of chokes in combination with additional filter components can be useful to reduce the emission of electromagnetic interference.

An additional choke must feature electromagnetic shielding, an adequate saturation current, minimal losses, and a nominal current greater than the continuous current of the motor. The below wiring example refers to an additional inductance of 2.2 µH or 22 µH. If a different additional inductance is required, also the filter components must be adapted accordingly. Should you need further help with the filter design, contact maxon Support at ➔http://support.maxongroup.com.

Example 1

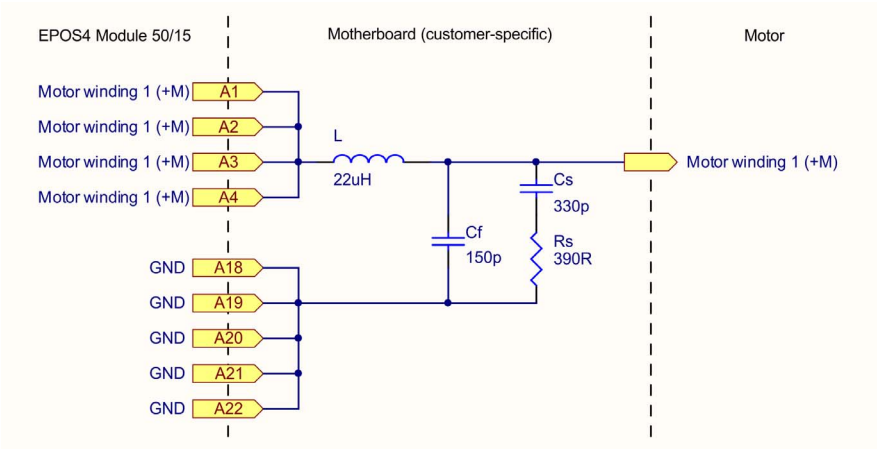

Continued on next page.

Example 2

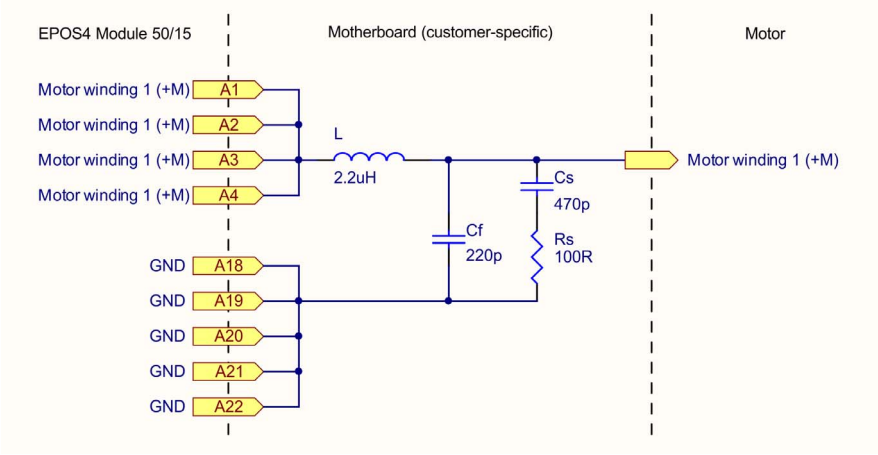

Figure 4-57 Wiring of motor winding 1 (analogously valid also for motor windings 2 & 3)

4.1.5 RS232 Transceiver

If you intend to use an RS232 interface, an external transceiver is necessary.

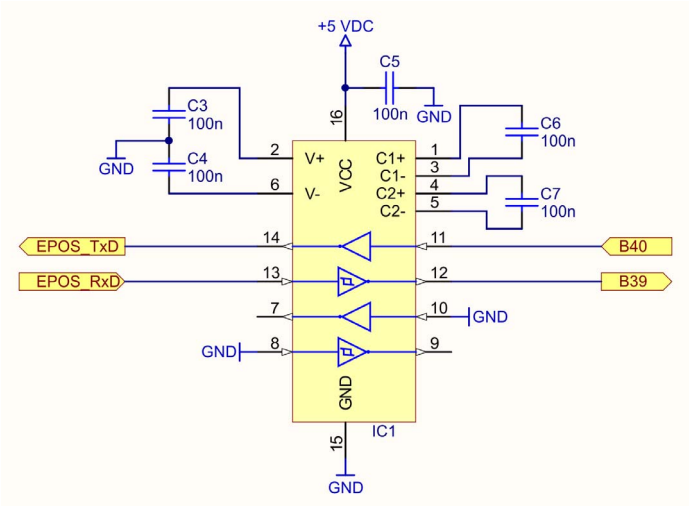

Figure 4-58 Wiring of RS232 transceiver

IMPORTANT

If you do not intend to use the RS232 interface, you must connect pin [B39] (DSP_RxD) with pin [A26] (sensor supply voltage V_{Sensor})!

4.1.6 Recommended Components and Manufacturers

Recommended components	
Socket header	Straight socket header, pluggable with 0.64 x 0.64 mm pin headers, 2.54 mm pitch, contact length 6 mm, current rating per pin = I_{cont} / 4, contact material: gold **16 poles, 2 rows:** • Samtec (SSM-116-x-DV) — SMT, 5.2 A per pin, 7.37 mm • E-Tec (BS2-032-H750-55) — SMT, 3 A per pin, 7.50 mm • FCI (91618-316LF) — SMT, 3 A per pin, 7.20 mm • Samtec (SSW-116-0x-x-D) — THT, 5.7 A per pin, 8.51 mm • E-Tec (BL2-032-S842-55) — THT, 3 A per pin, 8.50 mm • FCI (87606-316LF) — THT, 3 A per pin, 8.50 mm **23 poles, 2 rows:** • Samtec (SSM-123-x-DV) — SMT, 5.2 A per pin, 7.37 mm • E-Tec (BS2-046-H750-55) — SMT, 3 A per pin, 7.50 mm • FCI (91618-323LF) — SMT, 3 A per pin, 7.20 mm • Samtec (SSW-123-0x-x-D) — THT, 5.7 A per pin, 8.51 mm • E-Tec (BL2-046-S842-55) — THT, 3 A per pin, 8.50 mm • FCI (87606-323LF) — THT, 3 A per pin, 8.50 mm
Fuse (FU1)	• Littelfuse 456 series, SMD NANO2 — Fuse 20 A, 18 A^2sec (0456 020)
TVS Diode (D1; D2)	• Vishay (SMBJ54A) — U_R = 54 V, U_{BR} = 60.0…66.3 V @ 1 mA, U_C = 87.1 V @ 6.9 A • Fairchild (SMBJ54A) — U_R = 54 V, U_{BR} = 60.0…66.6 V @ 1 mA, U_C = 87.1 V @ 6.9 A • Littelfuse (SMBJ54A) — U_R = 54 V, U_{BR} = 60.0…66.6 V @ 1 mA, U_C = 87.1 V @ 6.9 A
Capacitor (C1)	The ripple current load for C1 depends on the motor's operating point and the power supply output capacity. Under worst case conditions however, the ripple current may reach I_{cont} / 2. Use capacitors with rated voltage ≥ 63 V and adequate ripple current to avoid overheat or life time reduction. Remark: If there is an excessive amount of reversed energy present (for example during deceleration of loads with a high inertia or during a vertical movement downwards), there might be the need to add an additional capacitor with a much higher capacitance (for example up to 10'000…47'000 µF) and/or to add a brake chopper, for example maxon DSR 70/30 (235811). **Example for C1 worst-case dimensioning:** I_{cont} = 12 A → 3x Panasonic (EEU-FR1J391); 390 µF, 63 V, 2000 mA r.m.s., ØxL 12.5 x 25 mm
Capacitor (C2)	To avoid voltage overshoot at power plug-in with a separately sourced logic supply, use an electrolytic capacitor covering the following requirements: 33 µF or 47 µF, 63 V, at least 265 mA r.m.s. • Rubicon (63ZLH47MEFCTA6.3X11) or (63YXJ47M6.3X11) • Panasonic (EEU-FR1J470B) • Nippon Chemicon (EKYB630ELL330MF11D) or (EKY-630 ELL330MF11D)
Motor Choke (L)	Inductance: ➔"Motor Cables and Motor Chokes" on page 4-86 Rated current: $I_{rms} \geq I_{cont}$; $I_{sat} \geq I_{peak}$ Construction: shielded **2.2 µH:** • Bourns (SRP1265A-2R2M) — I_{rms} 22 A, I_{sat} 37 A, 12.5 x 13.5 x 6.4 mm • Vishay (IHLP5050FDER2R2M01) — I_{rms} 22 A, I_{sat} 40 A, 12.9 x 13.2 x 6.5 mm • Laird (MGV12072R2M-10) — I_{rms} 22 A, I_{sat} 40 A, 12.6 x 13.5 x 6.5 mm **22 µH:** • Würth (WE-PD-XXL / 7447709220) — I_{rms} 5.3 A, I_{sat} 6.5 A, 12.5 x 12.5 x 10 mm

Continued on next page.

Recommended components	
Motor Filter	**Example 1** • Motor Choke L 22 µH • Filter Capacitor Cf 150 pF, 100 V • Snubber Capacitor Cs 330 pF, 100 V • Snubber Resistor Rs 390 Ω, 0.125 W **Example 2** • Motor Choke L 2.2 µH • Filter Capacitor Cf 220 pF, 100 V • Snubber Capacitor Cs 470 pF, 100 V • Snubber Resistor Rs 100 Ω, 0.25 W
RS232 (IC1) (C3…C7)	**RS232 transceiver (IC1)** • Texas Instruments (MAX202IPW) • ST Microelectronics (ST202EBTR)
	Capacitors (C3…C7) • 100 nF, X7R, 16 V

Table 4-102 Motherboard Design Guide – Recommended components

4.2 Design Guidelines

The following instructions are intended to serve as an aid when designing an application-specific motherboard and ensures the correct and reliable integration of the Module.

While designing a motherboard, consider the following characteristics:

- Pin assignment (➔page 3-22)
- Technical data (➔page 2-11) and dimensional drawing (➔page 2-17)

4.2.1 Ground

All ground connections (GND) should be internally connected to the Module (equal potential). It is customary to equip the motherboard with a ground plane. All ground connections should be connected to the voltage supply ground via wide conductive tracks.

Pin	Signal	Description
A18…A22	GND	Ground
B16	GND	Ground
B37…B38	GND	Ground

Table 4-103 Motherboard Design Guide – Grounding

If an earth potential is in place or required, the ground plane should be connected to the earth potential via one or more capacitors. The use of ceramic capacitors with 100 nF and 100 V is recommended.

4.2.2 Layout

Guidelines for the layout of the motherboard:

- Connector pins [A13], [A14], [A15], and [A16] for $+V_{CC}$ (nominal power supply voltage) should be connected to the fuse via wide conductive tracks.
- Connector pins [A18], [A19], [A20], [A21], [A22], [B16], [B37], and [B38] for GND (ground) should be connected with the operating voltage ground via wide conductive tracks.
- Connector pin [B39] (DSP_RxD) must be connected to [A26] (sensor supply voltage; V_{Sensor}) when RS232 is not in use.
- The width of the conductive tracks and the copper coating thickness of the conductors for supply voltage and motor depend on the current required in your application. A minimum track width of 75 mil and a minimum copper coating thickness of 35 µm are recommended.

4.3 THT Footprint

Possible dimensional differences in STEP files

For conversion reasons, the below stated dimensions may slightly differ from the dimensions specified in the downloadable STEP file. Use only the below stated dimensions for your design.

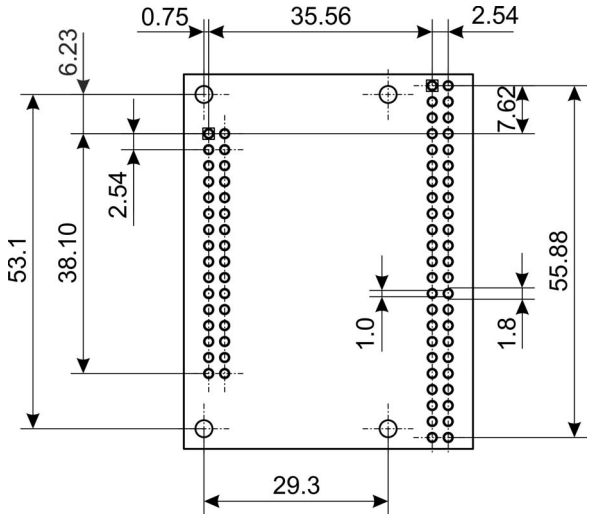

Figure 4-59 THT footprint [mm] – Top View

••page intentionally left blank••

5 WIRING

In this section you will find the wiring information for the setup you are using. You can either use the consolidated wiring diagrams (➔Figure 5-61 and Figure 5-62) featuring the full scope of interconnectivity and pin assignment. Or you may wish to use the connection overviews for either DC motor or EC (BLDC) motor that will assist you in determining the wiring for your particular motor type and the appropriate feedback signals.

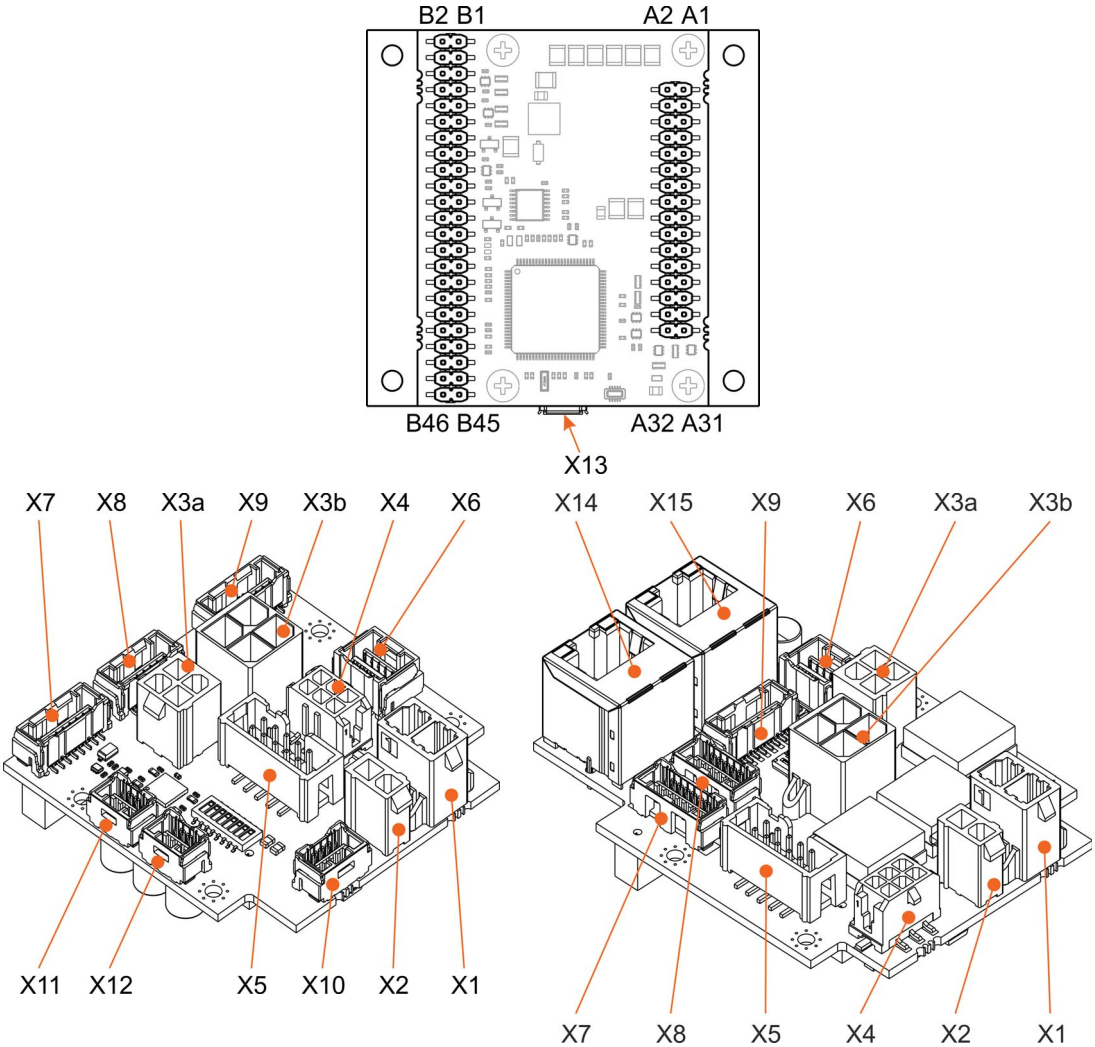

Figure 5-60 Interfaces – Designations and location

Signs and abbreviations used

The subsequent diagrams feature these signs and abbreviations:

- *«EC Motor» stands for brushless EC motor (BLDC).*
- ⏚ *Ground safety earth connection (optional).*

5.1 Possible Combinations to connect a Motor

The following tables show feasible ways on how to connect the motor with its respective feedback signals or possible combinations thereof. To find the wiring that best suits your setup, proceed as follows:

1) Decide on the type of motor you are using; either DC or EC (BLDC) motor.
2) Connect the power supply and the logic supply by following the link to the stated figure.
3) Check-out the listing for the combination that best suits your setup. Pick the wiring method # and go to the respective table; for DC motor ➔Table 5-104, for EC (BLDC) motor ➔Table 5-105.
4) Pick the row with the corresponding wiring method # and follow the link (or links) to the stated figure(s) to find the relevant wiring information.

5.1.1 DC Motor

Power supply & optional logic supply . . . . . Figure 5-63

Motor & feedback signals

Without sensor . . . . . Method # DC1

Digital incremental encoder . . . . . Method # DC2 or DC3

Analog incremental encoder SinCos . . . . . Method # DC4

SSI absolute encoder. . . . . Method # DC5

Digital incremental encoder & Digital incremental encoder . . . . . Method # DC6

Digital incremental encoder & Analog incremental encoder SinCos . . . . . Method # DC7

Digital incremental encoder & SSI absolute encoder. . . . . Method # DC8

Method #	Digital Incremental Encoder 1 (Sensor 1) X5	Digital Incremental Encoder 2 (Sensor 2) X6	Analog Incremental Encoder (Sensor 2) X6	SSI Absolute Encoder (Sensor 2) X6	➔ Figure(s)
DC1					5-64
DC2	✓				5-64 5-67
DC3		✓			5-64 5-68
DC4			✓		5-64 5-69
DC5				✓	5-64 5-70
DC6	✓	✓			5-64 5-67 / 5-68
DC7	✓		✓		5-64 5-67 / 5-69
DC8	✓			✓	5-64 5-67 / 5-70

Table 5-104 Possible combinations of feedback signals for DC motor

5.1.2 EC (BLDC) Motor

Power supply & optional logic supply . . . . . Figure 5-63

Motor & feedback signals

Hall sensors . . . . . Method # EC1

Hall sensors & Digital incremental encoder . . . . . Method # EC2 or EC3

Hall sensors & Analog incremental encoder SinCos . . . . . Method # EC4

Hall sensors & SSI absolute encoder . . . . . Method # EC5

Hall sensors & Digital incremental encoder & Digital incremental encoder . . . . . Method # EC6

Hall sensors & Digital incremental encoder & Analog incremental encoder SinCos . . . . . Method # EC7

Hall sensors & Digital encoder & SSI absolute encoder . . . . . Method # EC8

Digital incremental encoder & SSI absolute encoder . . . . . Method # EC9

SSI absolute encoder . . . . . Method # EC10

Method #	Hall sensors (Sensor 3) X4	Digital Incremental Encoder 1 (Sensor 1) X5	Digital Incremental Encoder 2 (Sensor 2) X6	Analog Incremental Encoder (Sensor 2) X6	SSI Absolute Encoder (Sensor 2) X6	➔ Figure(s)
EC1	✓					5-65 5-66
EC2	✓	✓				5-65 5-66 / 5-67
EC3	✓		✓			5-65 5-66 / 5-68
EC4	✓			✓		5-65 5-66 / 5-69
EC5	✓				✓	5-65 5-66 / 5-70
EC6	✓	✓	✓			5-65 5-66 / 5-67 / 5-68
EC7	✓	✓		✓		5-65 5-66 / 5-67 / 5-69
EC8	✓	✓			✓	5-65 5-66 / 5-67 / 5-70
EC9		✓			✓	5-65 5-67 / 5-70
EC10					✓	5-65 5-70

Table 5-105 Possible combinations of feedback signals for EC (BLDC) motor

5.2 Main Wiring Diagrams

5.2.1 Module & Compact CAN

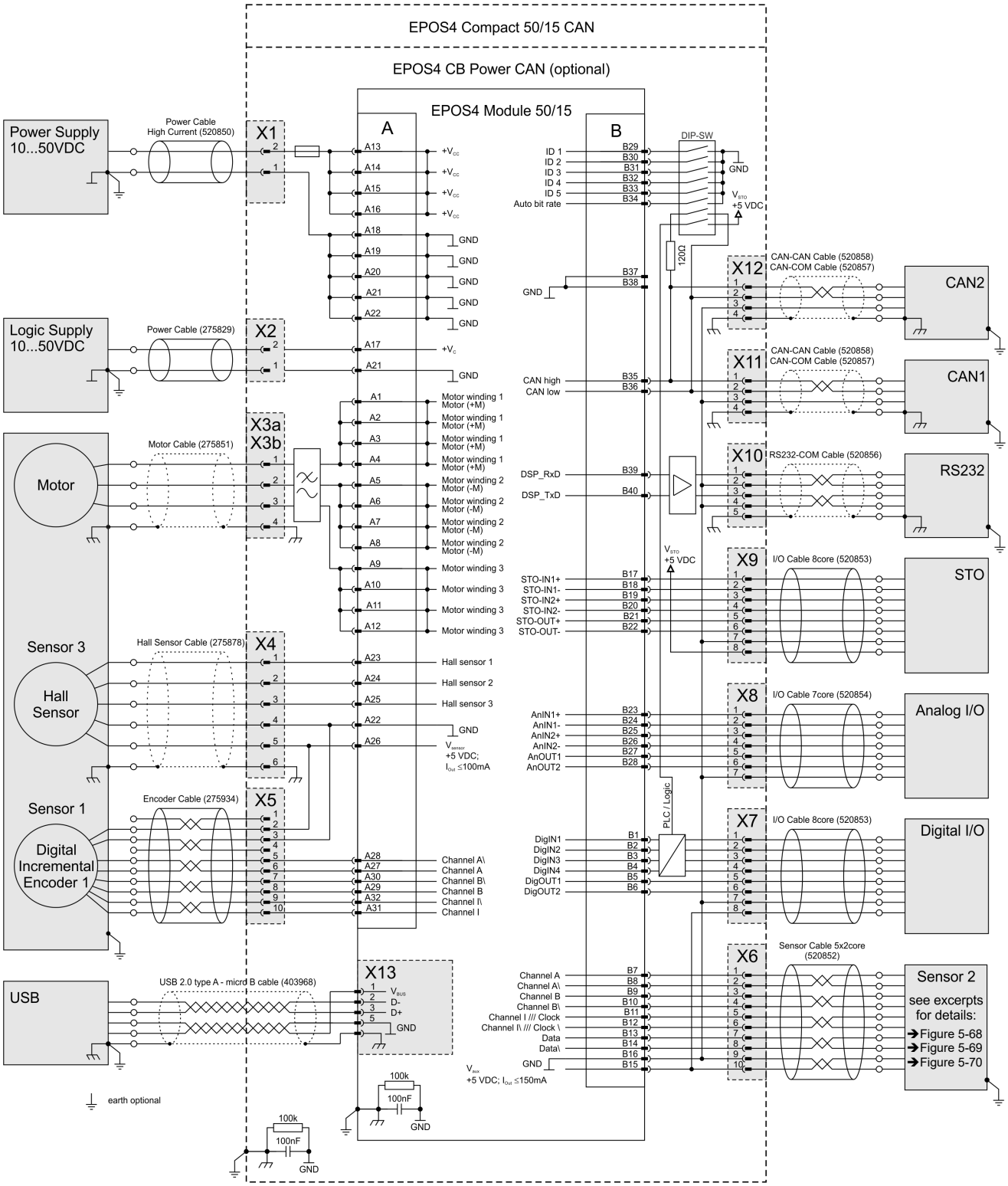

Figure 5-61 Main wiring diagram – Module & Compact CAN

5.2.2 Module & Compact EtherCAT

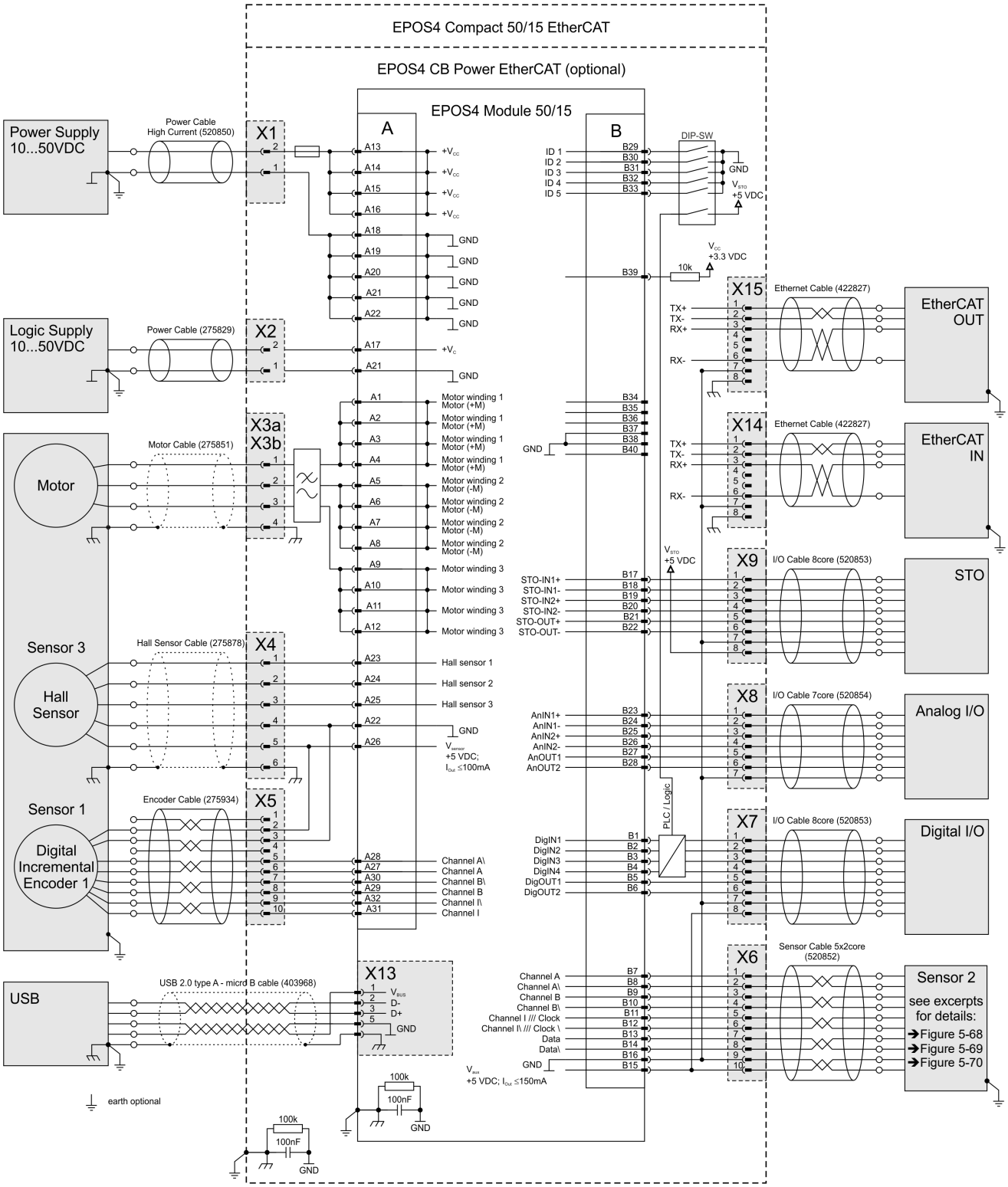

Figure 5-62 Main wiring diagram – Module & Compact EtherCAT

5.3 Excerpts

5.3.1 Power & Logic Supply

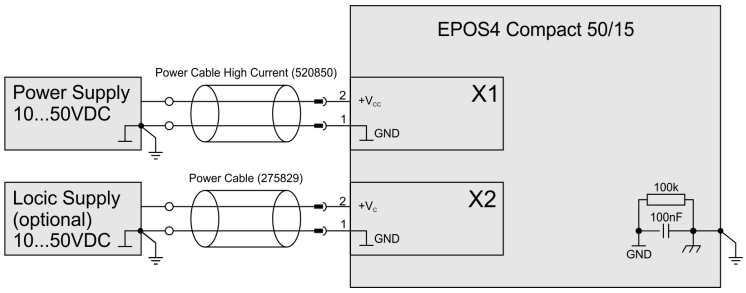

Figure 5-63 Power & logic supply

5.3.2 DC Motor

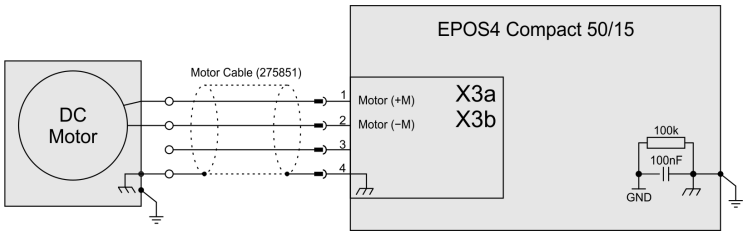

Figure 5-64 DC motor

5.3.3 EC (BLDC) Motor

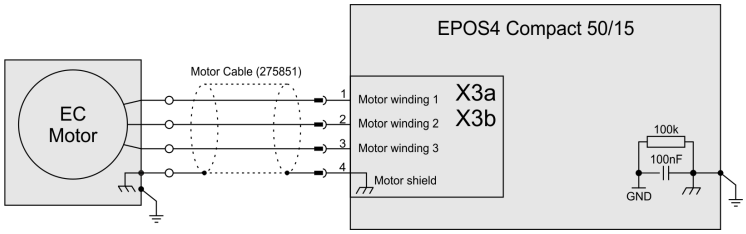

Figure 5-65 EC (BLDC) motor

5.3.4 Hall Sensors (Sensor 3)

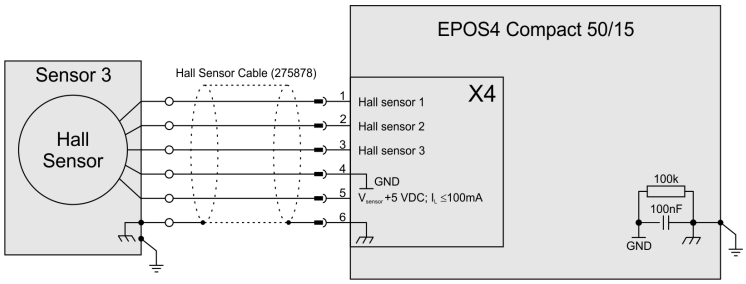

Figure 5-66 Hall sensors (Sensor 3)

5.3.5 Digital Incremental Encoder 1 (Sensor 1)

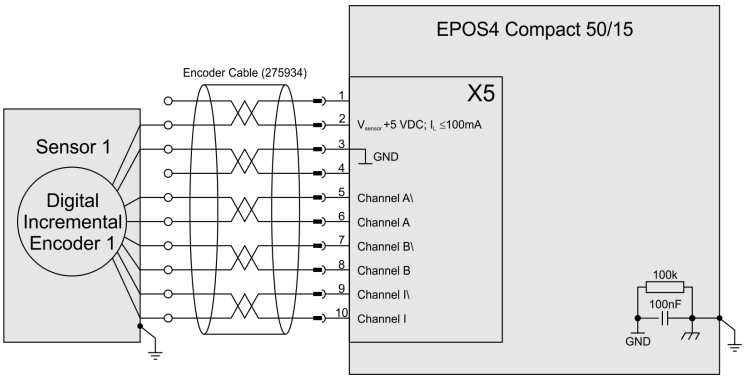

Figure 5-67 Digital incremental encoder 1 (Sensor 1)

5.3.6 Digital Incremental Encoder 2 (Sensor 2)

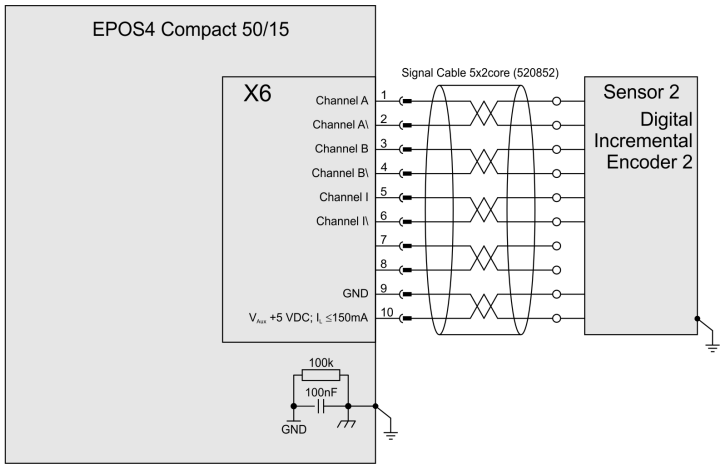

Figure 5-68 Digital incremental encoder 2 (Sensor 2)

5.3.7 Analog incremental encoder SinCos (Sensor 2)

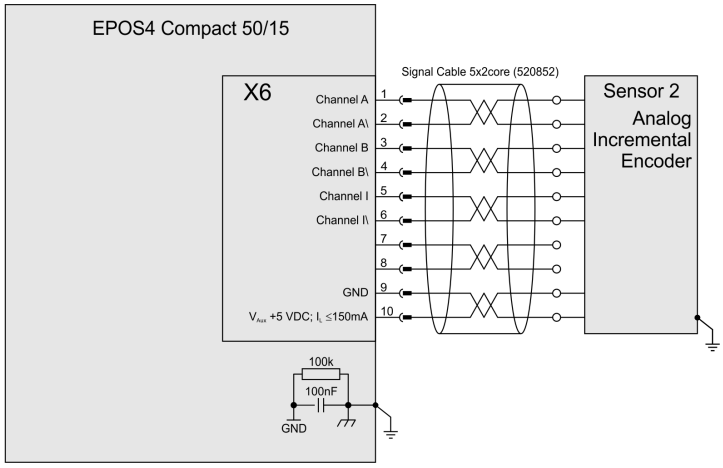

Figure 5-69 Analog incremental encoder (Sensor 2)

5.3.8 SSI Encoder (Sensor 2)

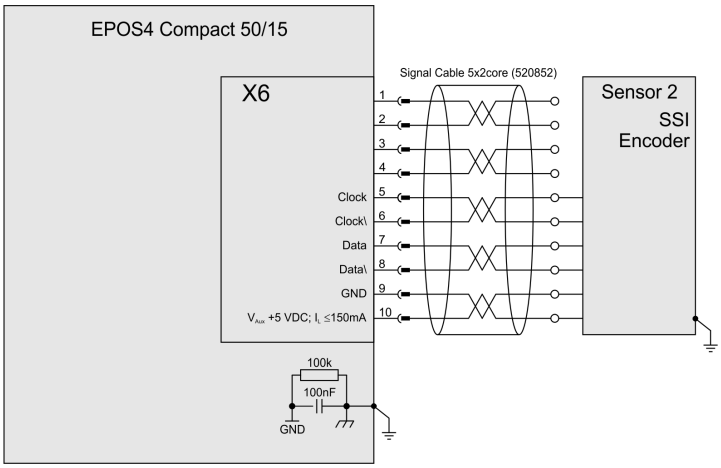

Figure 5-70 SSI encoder (Sensor 2)

LIST OF FIGURES

Figure 1-1 Documentation structure . . . 5
Figure 1-2 Configuration overview . . . 8
Figure 2-3 Derating of output current (operation without additional heat sink) . . . 14
Figure 2-4 Power dissipation and efficiency – EPOS4 Module/Compact 50/15 CAN . . . 16
Figure 2-5 Power dissipation and efficiency – EPOS4 Module/Compact 50/15 EtherCAT . . . 16
Figure 2-6 EPOS4 Module 50/15 – Dimensional drawing [mm] . . . 17
Figure 2-7 EPOS4 CB Power CAN – Dimensional drawing [mm] . . . 18
Figure 2-8 EPOS4 Compact 50/15 CAN – Dimensional drawing [mm] . . . 18
Figure 2-9 EPOS4 CB Power EtherCAT – Dimensional drawing [mm] . . . 19
Figure 2-10 EPOS4 Compact 50/15 EtherCAT – Dimensional drawing [mm] . . . 19
Figure 3-11 Pin assignment . . . 22
Figure 3-12 EPOS4 CB Power CAN (left) / EPOS4 Compact 50/15 CAN (right) . . . 25
Figure 3-13 EPOS4 CB Power EtherCAT (left) / EPOS4 Compact 50/15 EtherCAT (right) . . . 25
Figure 3-14 Connector Boards – Connectors . . . 28
Figure 3-15 Power supply connector X1 . . . 29
Figure 3-16 Logic supply connector X2 . . . 30
Figure 3-17 Motor connectors X3a (left) and X3b (right) . . . 31
Figure 3-18 Hall sensor connector X4 . . . 33
Figure 3-19 Encoder connector X5 . . . 34
Figure 3-20 Sensor connector X6 . . . 35
Figure 3-21 Digital I/O connector X7 . . . 36
Figure 3-22 Analog I/O connector X8 . . . 37
Figure 3-23 STO connector X9 . . . 38
Figure 3-24 RS232 connector X10 . . . 39
Figure 3-25 CAN 1 connector X11/CAN 2 connector X12 . . . 40
Figure 3-26 EtherCAT IN & EtherCAT OUT connectors X14 & X15 . . . 41
Figure 3-27 DIP switch SW1 . . . 43
Figure 3-28 Hall sensor 1 input circuit (analogously valid for Hall sensors 2 & 3) . . . 49
Figure 3-29 Encoder input circuit Ch A “differential” (analogously valid for Ch B & Ch I) . . . 51
Figure 3-30 Encoder input circuit Ch A “single-ended” (analogously valid for Ch B & Ch I) . . . 52
Figure 3-31 Digital incremental encoder input circuit Ch A “differential” (analogously valid for Ch B) . . . 54
Figure 3-32 Digital incremental encoder input circuit Ch I . . . 54
Figure 3-33 Digital incremental encoder input circuit Ch A “single-ended” (analogously valid for Ch B) . . . 55
Figure 3-34 Digital incremental encoder input circuit Ch I . . . 56
Figure 3-35 Analog incremental encoder input circuit Ch A “differential” (analogously valid for Ch B) . . . 57
Figure 3-36 Analog incremental encoder input circuit Ch I (digital evaluation) . . . 58
Figure 3-37 SSI absolute encoder data input . . . 59
Figure 3-38 SSI absolute encoder clock output . . . 60
Figure 3-39 HsDigIN1 circuit “differential” (analogously valid for HsDigIN2…4) . . . 61
Figure 3-40 HsDigIN1 circuit “single-ended” (analogously valid for HsDigIN2…4) . . . 62
Figure 3-41 HsDigOUT1 output circuit . . . 63

Figure 3-42 DigIN1 circuit (analogously valid for DigIN2…4) – Module . . . 64
Figure 3-43 DigIN1 circuit (analogously valid for DigIN2…4) – Compact / Logic level setting . . . 65
Figure 3-44 DigIN1 circuit (analogously valid for DigIN2…4) – Compact / PLC level setting . . . 66
Figure 3-45 DigOUT1 circuit (analogously valid for DigOUT2 and Compact) . . . 66
Figure 3-46 DigOUT1 “sinks” (analogously valid for DigOUT2 and Compact) . . . 67
Figure 3-47 DigOUT1 “source” (analogously valid for DigOUT2 and Compact) . . . 67
Figure 3-48 STO-IN1 circuit (analogously valid for STO-IN2) . . . 69
Figure 3-49 STO-OUT circuit . . . 69
Figure 3-50 AnIN1 circuit (analogously valid for AnIN2) . . . 70
Figure 3-51 AnOUT1 circuit (analogously valid for AnOUT2) . . . 71
Figure 3-52 SCI circuit . . . 72
Figure 3-53 USB connector X13 . . . 78
Figure 3-54 LEDs – Location . . . 79
Figure 4-55 Wiring of power supply . . . 84
Figure 4-56 Wiring of logic supply . . . 85
Figure 4-57 Wiring of motor winding 1 (analogously valid also for motor windings 2 & 3) . . . 87
Figure 4-58 Wiring of RS232 transceiver . . . 87
Figure 4-59 THT footprint [mm] – Top View . . . 91
Figure 5-60 Interfaces – Designations and location . . . 93
Figure 5-61 Main wiring diagram – Module & Compact CAN . . . 96
Figure 5-62 Main wiring diagram – Module & Compact EtherCAT . . . 97
Figure 5-63 Power & logic supply . . . 98
Figure 5-64 DC motor . . . 98
Figure 5-65 EC (BLDC) motor . . . 98
Figure 5-66 Hall sensors (Sensor 3) . . . 98
Figure 5-67 Digital incremental encoder 1 (Sensor 1) . . . 99
Figure 5-68 Digital incremental encoder 2 (Sensor 2) . . . 99
Figure 5-69 Analog incremental encoder (Sensor 2) . . . 99
Figure 5-70 SSI encoder (Sensor 2) . . . 100

LIST OF TABLES

Table 1-1 Notation used . . . 6
Table 1-2 Symbols and signs . . . 6
Table 1-3 Brand names and trademark owners . . . 7
Table 1-4 Abbreviations. . . . 9
Table 2-5 Technical data . . . 13
Table 2-6 Thermal resistance of additional heat sink [K/W] . . . 15
Table 2-7 Heat sink – Recommended components . . . 15
Table 2-8 Limitations . . . 16
Table 2-9 Standards . . . 20
Table 3-10 Pin assignment A1…A32 (X1…X5). . . . 22
Table 3-11 Pin assignment B1…B46 (X6…X12). . . . 24
Table 3-12 Prefab maxon cables. . . . 26
Table 3-13 EPOS4 Connector Set – Content . . . 27
Table 3-14 Recommended tools . . . 27
Table 3-15 Power supply connector X1 – Pin assignment . . . 29
Table 3-16 Power Cable High Current . . . 29
Table 3-17 Logic supply connector X2 – Pin assignment . . . 30
Table 3-18 Power Cable . . . 30
Table 3-19 Motor connector X3a / X3b – Pin assignment for maxon DC motor . . . 31
Table 3-20 Motor connector X3a / X3b – Pin assignment for maxon EC motor . . . 31
Table 3-21 Motor Cable. . . . 32
Table 3-22 Motor Cable High Current . . . 32
Table 3-23 Hall sensor connector X4 – Pin assignment . . . 33
Table 3-24 Hall Sensor Cable . . . 33
Table 3-25 Encoder connector X5 – Pin assignment . . . 34
Table 3-26 Encoder connector X5 – Accessories . . . 34
Table 3-27 Encoder Cable. . . . 34
Table 3-28 Sensor connector X6 – Pin assignment . . . 35
Table 3-29 Sensor Cable 5x2core. . . . 36
Table 3-30 Digital I/O connector X7 – Pin assignment . . . 36
Table 3-31 Signal Cable 8core . . . 36
Table 3-32 Analog I/O connector X8 – Pin assignment. . . . 37
Table 3-33 Signal Cable 7core . . . 37
Table 3-34 STO connector X9 – Pin assignment . . . 38
Table 3-35 STO Idle Connector. . . . 38
Table 3-36 RS232 connector X10 – Pin assignment. . . . 39
Table 3-37 RS232-COM Cable . . . 39
Table 3-38 CAN 1 connector X11/CAN 2 connector X12 – Pin assignment . . . 40
Table 3-39 CAN-COM Cable. . . . 40
Table 3-40 CAN-CAN Cable . . . 40
Table 3-41 EtherCAT IN & EtherCAT OUT connectors X14 & X15 – Pin assignment . . . 41

Table 3-42 Ethernet Cable . . . 42
Table 3-43 DIP switch SW1 – Binary code values . . . 43
Table 3-44 DIP switch SW1 – Examples . . . 44
Table 3-45 DIP switch SW1 – CAN automatic bit rate detection . . . 44
Table 3-46 DIP switch SW1 – CAN bus termination . . . 45
Table 3-47 DIP switch SW1 – Digital input level . . . 45
Table 3-48 Spare parts list . . . 45
Table 3-49 Power supply – Pin assignment . . . 46
Table 3-50 Power supply requirements . . . 46
Table 3-51 Logic supply – Pin assignment . . . 47
Table 3-52 Logic supply requirements . . . 47
Table 3-53 DC motor – Pin assignment . . . 48
Table 3-54 EC motor – Pin assignment . . . 48
Table 3-55 Hall sensor – Pin assignment . . . 49
Table 3-56 Hall sensor specification . . . 49
Table 3-57 Encoder – Pin assignment . . . 50
Table 3-58 Differential encoder specification . . . 51
Table 3-59 Single-ended encoder specification . . . 52
Table 3-60 Incremental encoder – Pin assignment . . . 53
Table 3-61 Differential digital incremental encoder specification . . . 53
Table 3-62 Single-ended digital incremental encoder specification . . . 55
Table 3-63 Differential analog incremental encoder specification . . . 57
Table 3-64 SSI absolute encoder – Pin assignment . . . 59
Table 3-65 SSI absolute encoder specification . . . 59
Table 3-66 High-speed digital I/Os – Pin assignment . . . 61
Table 3-67 Differential high-speed digital input specification . . . 61
Table 3-68 Single-ended high-speed digital input specification . . . 62
Table 3-69 High-speed digital output specification . . . 63
Table 3-70 Digital I/Os – Pin assignment – Module . . . 64
Table 3-71 Digital input specification . . . 64
Table 3-72 Digital I/Os – Pin assignment – Compact . . . 65
Table 3-73 Digital input specification – Logic level setting . . . 65
Table 3-74 Digital input specification – PLC level setting . . . 66
Table 3-75 Digital output specification . . . 66
Table 3-76 Digital output – Sinks . . . 67
Table 3-77 Digital output – Source . . . 67
Table 3-78 STO I/Os – Pin assignment . . . 68
Table 3-79 STO input specification . . . 68
Table 3-80 STO output specification . . . 69
Table 3-81 STO logic state . . . 69
Table 3-82 Analog I/Os – Pin assignment . . . 70
Table 3-83 Analog input specification . . . 70
Table 3-84 Analog output specification . . . 71
Table 3-85 SCI – Pin assignment . . . 72

Table 3-86 SCI specification . . . 72
Table 3-87 RS232 – Pin assignment . . . 73
Table 3-88 RS232 interface specification . . . 73
Table 3-89 CAN bus line / CAN 1 / CAN 2 – Pin assignment . . . 74
Table 3-90 CAN interface specification . . . 74
Table 3-91 ID – Pin assignment . . . 75
Table 3-92 CAN ID / DEV ID specification . . . 75
Table 3-93 ID – Examples . . . 76
Table 3-94 Bit rate detection specification . . . 76
Table 3-95 SPI – Pin assignment . . . 77
Table 3-96 USB connector X13 – Pin assignment . . . 78
Table 3-97 USB Type A - micro B Cable . . . 78
Table 3-98 USB interface specification . . . 78
Table 3-99 NET Status LEDs . . . 80
Table 3-100 Device Status LEDs . . . 80
Table 3-101 EtherCAT Port LED . . . 81
Table 4-102 Motherboard Design Guide – Recommended components . . . 89
Table 4-103 Motherboard Design Guide – Grounding . . . 90
Table 5-104 Possible combinations of feedback signals for DC motor . . . 94
Table 5-105 Possible combinations of feedback signals for EC (BLDC) motor . . . 95

••page intentionally left blank••

INDEX

A

abbreviations used *9*
alerts *6*
analog incremental encoder (differential) *57*
analog inputs *70*
analog outputs *71*
applicable EU directive *21*
applicable regulations *10*

B

BiSS encoder, wiring *100*
bit rate detection *44*, *76*
bit rate, default *74*
BLDC motor, connection *22*, *48*

C

C1 (capacitor) *84*
C2 (capacitor) *85*
cables (prefab)
- CAN-CAN Cable *40*
- CAN-COM Cable *40*
- Encoder Cable *34*
- Ethernet Cable *42*
- Hall Sensor Cable *33*
- Motor Cable *32*
- Motor Cable High Current *32*
- Power Cable *30*
- Power Cable High Current *29*
- RS232-COM Cable *39*
- Sensor Cable 5x2core *36*
- Signal Cable 7core *37*
- Signal Cable 8core *36*
- STO Idle Connector *38*
- USB Type A - micro B Cable *78*

CAN bus termination *45*, *74*
CAN ID (see “ID”)
CAN interface *74*
choke, motor *86*
connectors
- X1 *29*
- X2 *30*
- X3a *31*
- X3b *31*
- X4 *33*
- X5 *34*
- X6 *35*
- X7 *36*
- X8 *37*
- X9 *38*
- X10 *39*
- X11 *40*
- X12 *40*
- X13 *78*
- X14 *41*
- X15 *41*

country-specific regulations *10*

D

D1 (DVS diode) *84*
D2 (DVS diode) *85*
DC motor, connection *22*, *48*
DEV ID (see “ID”)
device condition, display of *79*
digital high-speed inputs (differential) *61*
digital high-speed inputs (single-ended) *62*
digital high-speed output *63*
digital incremental encoder (differential) *53*
digital incremental encoder (single-ended) *55*
digital inputs *64*
digital outputs *66*
DIP switch SW1 *43*

E

EC motor, connection *22*, *48*
encoders
- absolute *59*
- differential *51*
- incremental *53*
- serial *59*
- SinCos *57*
- single-ended *52*

EnDat encoder, wiring *100*
EPOS4 Connector Set *27*
ESD *10*
EU directive, applicable *21*

F

FU1 (input fuse) *84*

H

Hall sensor *49*
how to
  calculate the required supply voltage *46*
  get help in designing the motherboard *83*
  interpret icons (and signs) used in this document *6*

I

ID (of the device) *43*
incorporation into surrounding system *21*
incremental encoder *53*
informatory signs *6*
inputs
  analog *70*
  digital *64*
  high-speed digital *61*
  STO *68*
interfaces
  CAN *40*, *74*
  EtherCAT *41*
  location and designation *93*
  RS232 *39*, *72*
  SCI *72*
  SPI *77*
  USB *78*
internal motor chokes *86*

L

LEDs, interpretation of *79*
logic supply *47*

M

mandatory action signs *6*
motor choke *86*
motor types, supported *8*

N

naming of components *9*
node address (see “ID”)
Node-ID (see “ID”)
notations used *6*

O

operating license *21*
outputs
  analog *71*
  digital *66*
  high-speed digital *63*
  STO *69*

P

part numbers
  275829 *30*
  275851 *32*
  275878 *33*
  275934 *34*
  403968 *78*
  422827 *42*
  504383 *8*
  520850 *29*
  520851 *32*
  520852 *36*
  520853 *36*
  520854 *37*
  520856 *39*
  520857 *40*
  520858 *40*
  520859 *27*
  520860 *38*
  520884 *8*, *25*
  520886 *8*, *25*
  604594 *8*, *25*
  605299 *8*, *25*
performance data *11*
pin assignment *22*
power supply *46*
precautions *10*
prerequisites prior installation *21*
prohibitive signs *6*
protective measures (ESD) *10*
purpose
  of the device *8*
  of the document *5*

R

regulations, applicable *10*
RS232 transceiver *87*

S

Safe Torque Off (STO) *68*
safety alerts *6*
safety first! *10*
SCI (Serial Communication Interface) *72*
Serial Communication Interface (SCI) *72*
serial encoder *59*
signs used *6*
SPI (Serial Peripheral Interface) *77*
SSI absolute encoder *59*
SSI encoder, wiring *100*
standards, fulfilled *20*
status LEDs *79*
STO (Safe Torque Off) *68*
supply voltage, required *46*
SW1 *43*
symbols used *6*

T

technical data *11*
termination (CAN bus) *45*, *74*

U

USB port *78*

W

wiring examples
- additional inductance on Motherboard *86*
- analog incremental encoder *99*
- DC motor *98*
- digital & digital incremental encoder *99*
- digital incremental encoder *99*
- DigOUT *67*
- EC (BLDC) motor *98*
- Hall sensors *98*
- power & logic supply *98*
- SSI encoder *100*

EtherCAT® is a registered trademark and patented technology, licensed by Beckhoff Automation GmbH, Germany

This document is protected by copyright. Any further use (including reproduction, translation, microfilming, and other means of electronic data processing) without prior written approval is not permitted. The mentioned trademarks belong to their respective owners and are protected under intellectual property rights.
© 2021 maxon. All rights reserved. Subject to change without prior notice.

CCMC | EPOS4 Module/Compact 50/15 Hardware Reference | Edition 2021-10 | DocID rel10268

maxon motor ag
Brünigstrasse 220 +41 41 666 15 00
CH-6072 Sachseln www.maxongroup.com